JOINT AIRCRAFT LOAD PLANNING

Welcome to the USAF Expeditionary Center

Building Airpower... from the ground up!

Our Goal:

Continually examine methods to improve the delivery of formal instruction through access to and communication with training industry leaders; fully utilize benchmarking/cross flow activities and seminar participation to investigate and determine the feasibility of new instructional delivery methods, tools, and technology; plan, budget, acquire, and employ approved methods/tools to ensure world-class training delivery/environment for the Air Transportation community.

Important Phone Numbers:

USAF EOS Registrar Office
DSN 650-7154
Commercial (609) 754-7154

423 TRS First Sergeant
DSN 650-7406
Commercial (609) 754-7406
Cell Phone: (609) 605-6410

Mr. Augustine Circello III
Air Transportation Section Chief
DSN 650-7303
Commercial (609) 754-7303

MSgt Robert Preston
NCOIC Air Transportation Section
DSN 650-7478
Commercial (609) 754-7478

TSgt Javier Hernandez
Course Director, JALP
DSN 650-7485
Commercial (609)754-7485

MSgt Anthony Leonard
AMC/A34I, JALP
DSN 779-4373

Joint Aircraft Load Planning (JALP)

Table of Contents

JALP Course Introduction..... 5

Deploying Unit Responsibilities 6

Material Handling Equipment 13

Palletization 20

Joint Inspection 31

Shoring 45

Unit Documentation..... 51

ATTLA 56

Load Planning & Aircraft Weight Balance 60

Aircraft Characteristics 72

Student Course Guide

This publication was produced by the USAF Expeditionary Operations School.

USAF Expeditionary Center USAF EOS/423 TRS
5656 Texas Avenue
Joint Base McGuire-Dix-Lakehurst, New Jersey 08640-7400

Introduction

The Joint Aircraft Load Planning Course prepares selected Joint, Interagency, Intergovernmental, and Multinational (JIIM) partners to develop load plans in ICODES. To improve overall Joint Interoperability, reduce frustrated cargo, increase DOD's Rapid Global Mobility (RGM) capabilities, and agile combat employment (ACE) initiative. Graduates of the Aircraft Load Planning Course are certified to produce an aircraft load plan for C-130H/J, C-17, and C-5M aircraft.

United States Transportation Command (USTRANSCOM) Velocity Initiative

As the Air Component to USTRANSCOM, Air Mobility Command designed the Joint Aircraft Load Planning Course (JALPC) to develop a mutual understanding of air mobility requirements and reduce user reliance on Air Mobility Support.

Headquarters AMC/A34I is the overall program manager of the JALP Course and executes training through the USAF Expeditionary Operations School located at Joint Base McGuire Dix Lakehurst. With an established curriculum, there are numerous sister service schools located around the globe that facilitate the same course with local instructors.

To further advance the USTRANSCOM velocity initiative, AMC also manages the Expeditionary Air/Ground Liaison Element (EAGLE) Teams. These groups of subject matter experts are postured to advise, assist, and accompany JIIM users in the planning, preparation, employment, and inspection of cargo, passengers, and documentation for air movement and maneuver taskings in all operating environments.

Air Mobility Liaison Officers (AMLOs) are also an asset that AMC can utilize to reduce reliance on Air Force assistance further. Their mission is to ensure our sister services know how to use AMC airlift to better support their mission. AMLOs eliminate those friction points, so the mobility enterprise operates smoothly. They can serve as a liaison between sister service units and the Air Force when needing to request airlift assets.

Deploying Unit Responsibilities

The objective of this lesson is for each student to comprehend deploying unit roles and responsibilities for air movements.

Test Objectives:

Identify the responsibilities of Mobility Forces and Deploying Forces.

State the benefits of reduced reliance on AMC assets

Select tasks accomplished during planning and preparation.

List items from the prohibited items briefing.

References:

DOD 4500.9-R Part III, 'Mobility' –Defense Transportation Regulation (DTR)

Website: *https://www.ustranscom.mil/dtr/dtrp3.cfm*

Defense Transportation Regulation Part III (Mobility)

This regulation provides Department of Defense (DOD) procedures and guidance for the deployment, sustainment, and redeployment of personnel, cargo, and equipment via all modes of transportation.

Chapter 302 – Pre-Deployment
Chapter 303 – Deployment
Chapter 304 – Sustainment
Chapter 305 – Redeployment

Key DTR Appendices:
Appendix B – Unit Airlift Affiliation, Load Planner Certification
Appendix J – HAZMAT Certification
Appendix L – A/DACG Checklist
Appendix N – Deploying Unit Activities
Appendix O – Joint Inspection Preparation
Appendix P – Center of Balance
Appendix R/S/U – Deployment Airfield Areas
Appendix V – Aircraft Load Plan
Appendix BB – Weapons, Ammunition, & HAZMAT

Functions

- **United States Transportation Command (USTRANSCOM):** Schedules airlift to move units from APOEs to APODs based on validated movement requirements.

- **Unified Commands**: Provide validated movement requirements// Designate the Service component to perform Arrival/Departure Airfield Control Group (A/DACG) functions in joint operations.

- **Major Commands:** Ensure the parent organization or home station installation CDR from which deploying units originate, organize, equip, and train personnel for A/DACG duties.

- **Supporting Installations:** Provide A/DACG and support all mobility forces (host, aggregating, and in-transit) as required (i.e., material handling equipment [MHE], container handling equipment [CHE], manpower, fuel, or staging facilities).

Mobility Forces

A deploying force will typically receive support from some type of Mobility Force. Mobility Force is a term used extensively in the Department of Defense airlift community, referring to those forces that provide airlift support to deploying forces. They are generally provided by the Air Mobility Command (AMC) but may be provided by non-Air Mobility Command hosts or support installations. Examples of AMC mobility forces are Contingency Response Elements, Contingency Response Teams, Aerial Ports, and Air Terminal. Non-Air Mobility Command mobility forces include Arrival/Departure Airfield Control Groups (A/DACG) and installation Deployment Forces (IDF).

Air Mobility Command Mobility (AMC) Forces

Contingency Response Element (CRE): Coordinates all Air Force operational aspects of the airlift mission/ Be responsible for aircraft movement control, communications, technical supervision of aircraft loading and offloading operations, aeromedical evacuation, and marshaling of aircraft.

Contingency Support Element (CSE): Performs maintenance and flying safety in support of CREs or existing Air Mobility Command (AMC)/non-AMC operations worldwide. They also provide weather, aerial port, and intelligence support.

Contingency Support Team (CST): Deploys to locations where airlift C2 and mission support are required but nonexistent and where a complete CRE is not required. A CST will provide air movement coordinating activities of a CRE. A CST performs maintenance, aerial port, and related support functions.

Aerial Port or Air Terminal: Air terminals are facilities that function as air transportation hubs and accommodate the loading and unloading of aircraft and in transit processing of traffic. The airfield on which an air terminal is located may or may not be designated an aerial port.

The focal point for aerial ports or air terminals is the Air Terminal Operations Center (ATOC). ATOC serves as the control center for all air transportation-related activities.

Non-AMC Mobility Forces

Arrival/Departure Airfield Control Group (A/DACG): A provisional organization designed to assist the AMC and the deploying unit in receiving, processing, and loading or unloading personnel and equipment.

Coordinates and controls units' reception and loading for deployment or redeployment and performs those functions when no mobility force is available. If a mobility force (normally ATOC) is available, a liaison will get tasked by the unit to assist. The deploying team will coordinate with the installation CDR and the CDR of each Service.

Troop Commander

The troop CDR is usually the senior military member of the deploying chalk and will be assigned by the Service deployment authority at the point of origin or at the APOE to perform those duties. Though the troop CDR holds no legal power as a CDR, they are responsible for acting as the primarily responsible authority for the chalk. Further guidance is provided in DOD 4500.9-R Part III, Defense Transportation Regulation (DTR), Chapter 303, Mobility, Appendix T.

Responsibilities include:

- Ensuring all passengers are checked for unauthorized materials that could present a flight hazard
- Maintain control of all passengers listed for movement on the flight and ensure all are informed of formations, expected departure, and reporting time.
- Be readily available to the Arrival/Departure Airfield Control Group (A/DACG).
- Maintain the good order and discipline of the members of the chalk.

PROHIBITED ITEMS BRIEFING

You may not take any of the following items under any circumstances:

a) Shotguns with barrels under 18 inches long.
b) Rifles with barrels under 16 inches long.
c) Automatic weapons (unless government issued and authorized in orders).
d) Switchblade knives and pointed scissors.
e) Brass knuckles.
f) Incendiary devices (e.g., flares).
g) Tear gas or mace.
h) Gunpowder, cartridges, or primers.
i) All torch lighters.
j) Other hazardous materials.

Deployment Operations

Air mobility operations involve the air transport of units, personnel, supplies, and equipment and may be conducted by any combination of force organizations. An air movement operation consists of two primary phases: planning, preparation, and execution. Unit deployment activities are detailed in Appendix N.

Planning and Preparation Phase

The movement of units by airlift demands extensive advanced planning on the part of the unit to be moved. A primary objective must be to minimize the time a unit being moved is non-operational. Planning is required to group personnel and material into the most effective loads, ensuring maximum conveyance utilization, orderly movement to and from unit areas, and efficient aircraft loading and offloading management.

Deployment planners and/or deploying unit will:

- Prepare personnel, cargo, and equipment for air movement IAW established priority, sequence, and Appendix O and Appendix H.

- Provide required shoring, floor protection materials, and 463L MHE.

- Appoint a planeload or troop CDR (chalk leader) for each mission aircraft carrying passengers.

- Prepare cargo and equipment using designated automatic identification technology enablers.

- Determine the number of 463L pallets, top and side nets, plastic pallet covers, shoring, and dunnage required.

- Provide ATTLA Certifications for any equipment proposed for airlift aboard USAF aircraft.

- Prepare and certify hazardous cargo and equipment

- Identify cargo or equipment that is sensitive and requires special preparation.
- Provide support requirements (e.g., MHE, weighing devices, and prime mover vehicles) to the A/DACG and airfield support forces.

The Air Force's AMC and Services will perform the following responsibilities as indicated:

	UNIT MOVE FUNCTIONS	RESPONSIBLE UNIT	
		AMC Mobility Force	Services
1.	Prepare cargo (weigh, mark, measure, load, secure, manifest, and compute Center Of Gravity (CG))		X
2.	Prepare and transmit electronic passenger and cargo manifest		X
3.	Prepare and certify hazardous cargo		X
4.	Prepare and certify load plans		X
5.	Provide load teams		X
6.	Load, secure, and off-load cargo		X
7.	Provide shoring, dunnage, and vehicle operators		X
8.	Establish and operate A/DACG		X
9.	Validate load plans	X	
10.	Validate passenger manifests	X	
11.	Supervise load teams	X	
12.	Provide technical assistance	X	
13.	Provide aircraft control	X	
14.	Provide control of load teams	X	
15.	Coordinate airflow information	X	
16.	Provide MHE and/or CHE (see Note)	X	X
17.	Provide MHE and/or CHE operators (see Note)	X	X
18.	Perform MHE and/or CHE maintenance (see Note)	X	X
19.	Perform joint inspection	X	X
20.	Apply automatic identification technology to unit equipment		X

Note: AMC will provide and operate Air Force-unique Container Handling Equipment (CHE)/MHE that is required but beyond the capability of user to provide, e.g., K-loaders, wide-body loaders.

Execution Phase

This phase involves the actual air movement of deploying units between the APOE and APOD.

Departure Airfield Operations: There may be four separate areas of activity in departure airfield operations: the marshalling area, the alert holding area (AHA), the call-forward area, and the ready line/loading ramp area.

Marshalling Area: The deploying unit is responsible for activities conducted within the marshalling area. In this area, the unit prepares for air movement by assembling vehicles, equipment, supplies, and personnel into mission loads (chalks).

Alert Holding Area (AHA): The A/DACG and/or host installation is responsible for activities conducted within the AHA. The deploying units will check-in with the AHA team chief. Deploying units will complete final preparation and assembly of personnel, cargo, and equipment into

individual mission loads (chalks).

Call-Forward Area: The activities conducted within the call-forward area are the responsibility of the A/DACG, host installation, and mobility force. In this area, the JI is conducted and discrepancies are corrected. Members of the deploying unit and the mobility force accomplish this inspection jointly. This is the final check to ensure all cargo and equipment is properly prepared and documented for safe and efficient air shipment. Improperly prepared cargo and equipment will not be accepted for airlift until all discrepancies are corrected. Incomplete chalks will not be accepted for JI.

Ready Line and Loading Ramp Area: The mobility force is responsible for and controls activities conducted within the ready line and loading ramp area. This area receives personnel, cargo, and equipment from the call-forward area; directs aircraft loading in conjunction with aircraft loadmasters; supervises the supported Service while loading and restraining cargo aboard aircraft; and conducts additional briefings and inspections to facilitate the loading of the aircraft.

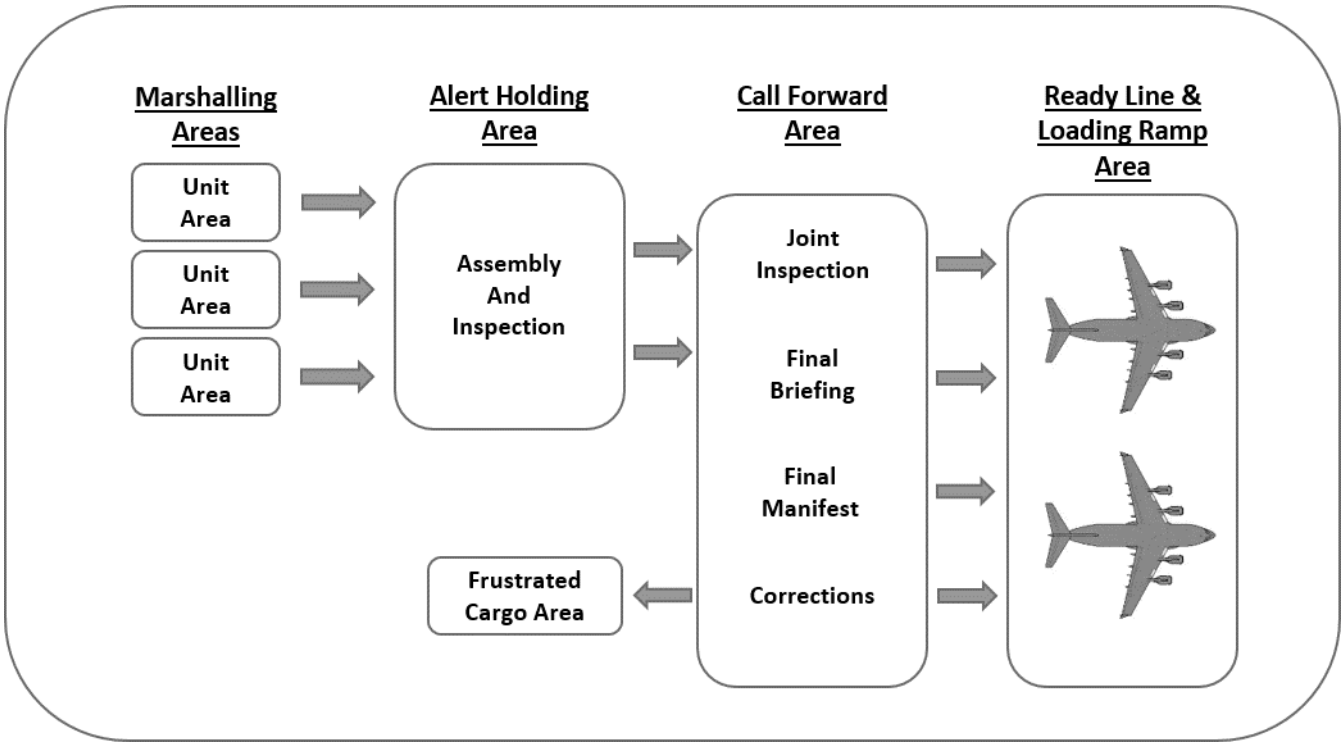

DEPLOYING UNIT RESPONSIBILITIES HOMEWORK

1. Which Part of the DTR governs the deployment of units?

2. Examples of AMC mobility forces are Contingency Response_____, _____ _____, _____ and _____.

3. What are three items that are prohibited from being carried by passengers on flights?

4. True or False. Deploying units are not responsible for preparing and certifying hazardous cargo.

5. In which area of the departure airfield operations do units establish cargo loads into chalks?

6. In which area of the departure airfield operations do units conduct joint inspections for cargo transported by air?

MATERIALS HANDLING EQUIPMENT

The objective of this lesson is for each student to know the correct type of material handling equipment to use during aircraft loading procedures.

Test Objectives: Identify the various types of material handling equipment available for loading.

Match the loaders most appropriate for loading aircraft presented.

Identify the different characteristics of each piece of material handling equipment in the AMC inventory.

State who is responsible for providing material handling equipment

References: DOD 4500.9-R Part III, Mobility, Defense Transportation Regulation (DTR)

Web Pages: http://www.transcom.mil/j5/pt/dtr_part_iii.cfm

Materials Handling Equipment

Materials Handling Equipment (MHE). Materials Handling Equipment describes equipment used in the packaging, handling, or transporting cargo in preparation for air shipment. Although there is an almost endless list of this type of equipment, this chapter describes the most common types used.

Availability. Because AMC is a full-time transportation agency, the command's inventory of MHE is quite large. Most MHE is dedicated to AMC aerial ports for day-to-day operations even with such a large inventory. Repositioning MHE from AMC and other Air Force bases to on-load locations is expensive, time-consuming, and occupies a tremendous amount of available airlift cargo space. For these reasons, you have a responsibility (as the user of the airlift) to provide as much MHE from local sources as possible. Many pieces of MHE that will adequately serve your needs may be found within your unit or on your installation. You must remember to plan and coordinate the use of MHE at deployed locations. Cargo that cannot be removed and transported from the airplane after it arrives is of little value to you. However, if you require MHE support, contact your affiliated AMCU as early as possible to arrange for assistance.

Forklifts. Forklifts are used to lift, transport, and stack cargo or equipment. Their use saves time and money in the handling of cargo. Forklifts are located at almost every military installation. These pieces of equipment are extremely valuable in all phases of cargo movement. They aid in cargo build-up at the unit area, transporting cargo to the airfield, and aircraft loading. Listed below are descriptions of several common types of forklifts, their respective capabilities, and a few of the advantages and disadvantages of each.

NOTE: *The only forklifts authorized to operate inside the aircraft cargo compartment are the 4,000-pound capacity, USMC MHE-237, rough terrain forklift, and the 10,000/13,000-pound capacity, adverse terrain forklift. Cargo floor ground loading axle limitations must not be exceeded while operating within the aircraft. Prior coordination is required.*

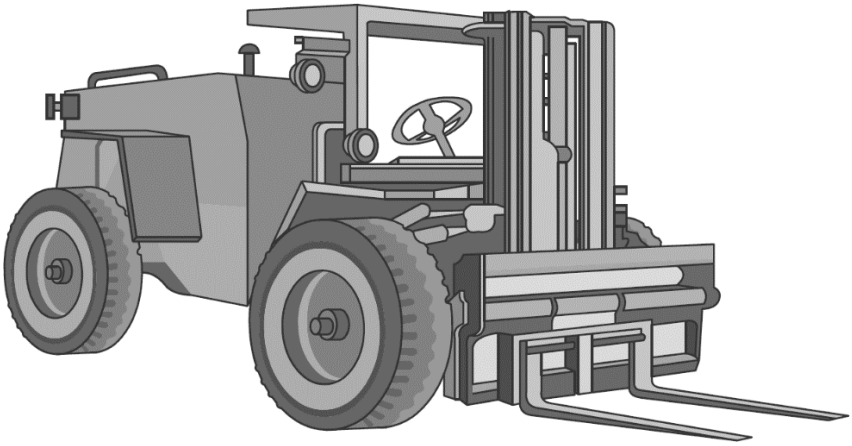

4K Forklift

USMC MHE-237 Rough Terrain 4K Forklift. The USMC MHE-237 rough terrain 4K forklift is designed for use in close quarters for storage and shipping operations. The air terminal area is used primarily for loading and unloading pallets and secondary cargo on vehicles. With the tines

(forks) removed and the addition of a front-mounted pintle hook, the 4K forklift makes an excellent pusher vehicle. The 4K is designed for high maneuverability and ease of operation in confined areas. It is capable of lifting and transporting loads up to 4,000 pounds. The tines will raise or lower and tilt forward or aft. Some models can even shift the load right or left. The only disadvantages of the 4K forklift are the limited weight lifting capability and the short tines. Because of the short tines, the 4K cannot handle 463L pallets. This forklift makes a good prime mover.

6K Forklift

6K Rough Terrain (RT) Forklift. The 6K RT forklift is considerably larger than the 4K. These vehicles usually are only found in US Army and Marine Corps inventories. It is designed to build up and move air transportable cargo rapidly. When equipped with a set of tine extenders, the 6K can lift 6,000 pounds and, unlike the 4K, may be used to load airlift aircraft with 463L pallets.

10K Standard Forklift: The 10K forklift is the most common forklift in the airlift inventory. The 10K can lift and transport 10,000 pounds of cargo, as its name implies. Like the 6K, the 10K can load 463L pallets onto airlift aircraft. Using rollerized tines on the forks makes it easier to load 463L pallets.

The 10K standard forklift is similar to the 4K in appearance, only much larger. The 10K-standard forklift can load the C-130, KC-135, C-17, and C-5 aircraft.

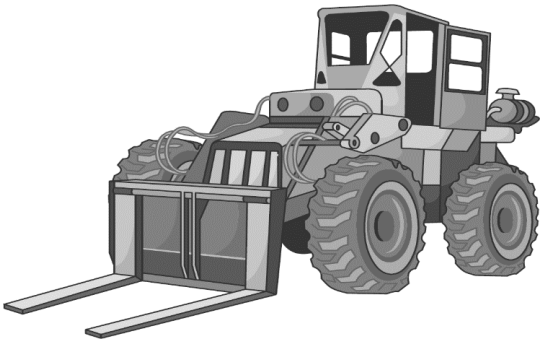

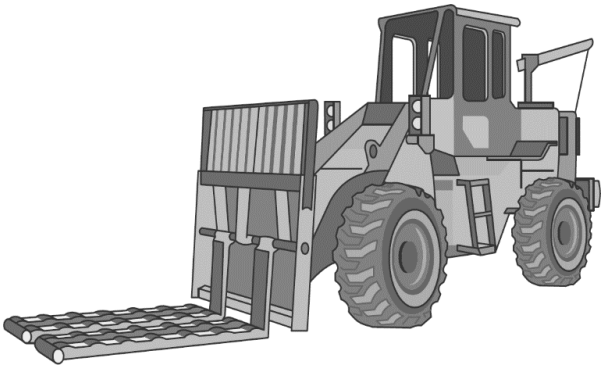

The 10/13K adverse terrain (AT) forklift. is similar to a front scoop loader with forklift tines substituted for the earth moving bucket. The 10/13K AT-forklift can load the C-130, C-17, and C-5 aircraft.

NOTES:

1. If rollerized tines are not available, pallets can be loaded onto the aircraft with bare tines. The 10K can be loaded on the C-5, C-17, and C-130. The 10K must be placed within specified locations on C-130 aircraft. It also requires sleeper shoring and removal of the cab for shipment.

2. On some 10K AT forklifts, the counterweights must also be removed before air shipment.

The 10/13K-pound capacity A/T forklift may be used as a prime mover to load and offload rolling stock within the aircraft, with the following restrictions:

- Forklift limitations and aircraft limitations must not be exceeded.
- The maximum speed on the aircraft ramp and cargo floor is 3 MPH.
- 10K Standard forklifts will not be used as prime movers.

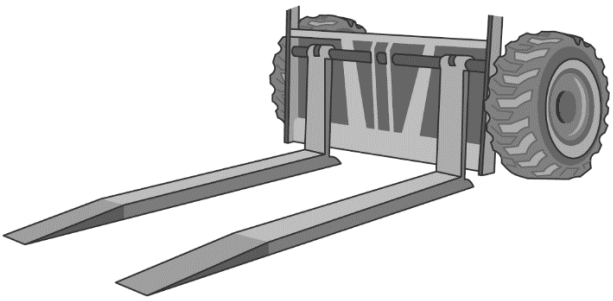

Bare Tine Extenders

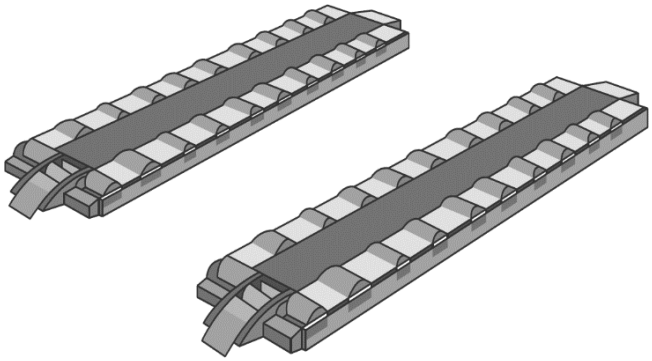

Rollerized Tine Extenders

Tine (Fork) Extenders. Tine extenders are designed in bare tine extenders and rollerized tine extenders. They are used to lengthen the forklift tines. Forklift tines must be at least 72 inches long for use with 463L pallets. Tine extenders provide this additional length. Either type of extender is acceptable.

K-loaders. K-loaders provides the capability to rapidly onload and offload 463L pallets from airlift aircraft. There are three types of K-loaders with their own capabilities, limitations, and common features. Their quantity and availability is limited. All are large and heavy, and many are extremely difficult to transport. All K-loaders are part of the 463L system. They are particularly useful for handling married pallets and airdrop platforms. When you anticipate the need for a K-loader, early and continuous coordination with your affiliated AMCU is essential.

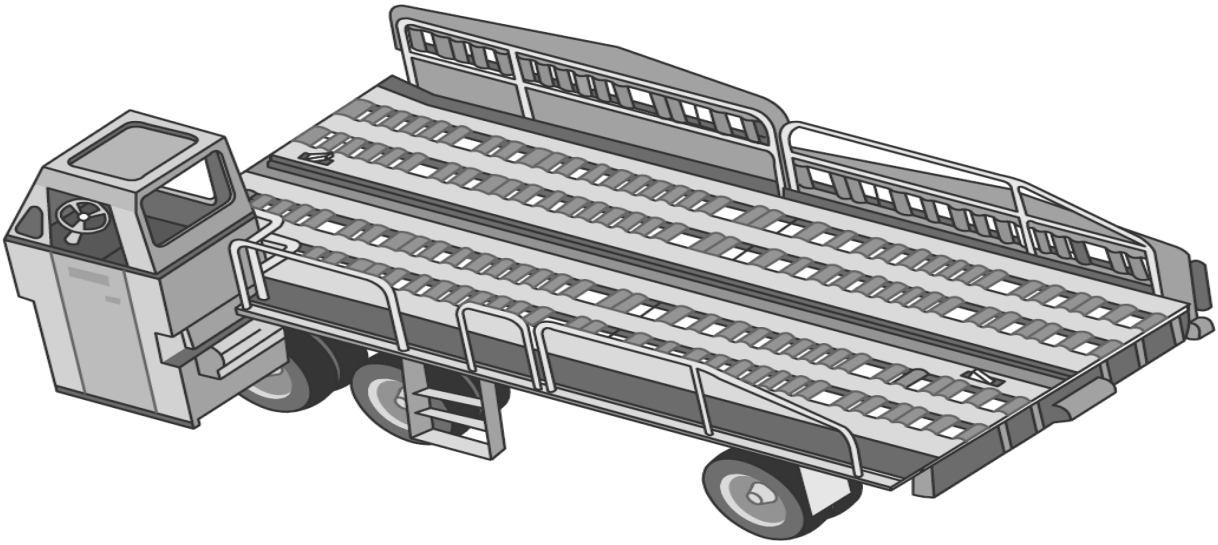

25K Loader

The 25K-loader is a self-propelled cargo transportation platform. It can lift and transport three 463L pallets up to a maximum cargo weight of 25,000 pounds. Its deck may be raised, lowered, tilted forward or aft permitting alignment with aircraft floors. The deck also can roll from side to side. The deck has rows of recessed rollers installed the entire length of the vehicle. These rollers are used as conveyers for palletized loads. Guide rails run the entire length of the deck to align the pallets with the aircraft rail system. Locks are installed in the rails to prevent the pallets from moving. The loader has removable safety rails and a side catwalk. A telescoping ladder can access the deck in either the up or down position. The 25K-loader may be transported on the C-130, C-17, or C-5 aircraft. The 25K-loader can load the C-130, KC-135, C-17, and C-5 aircraft.

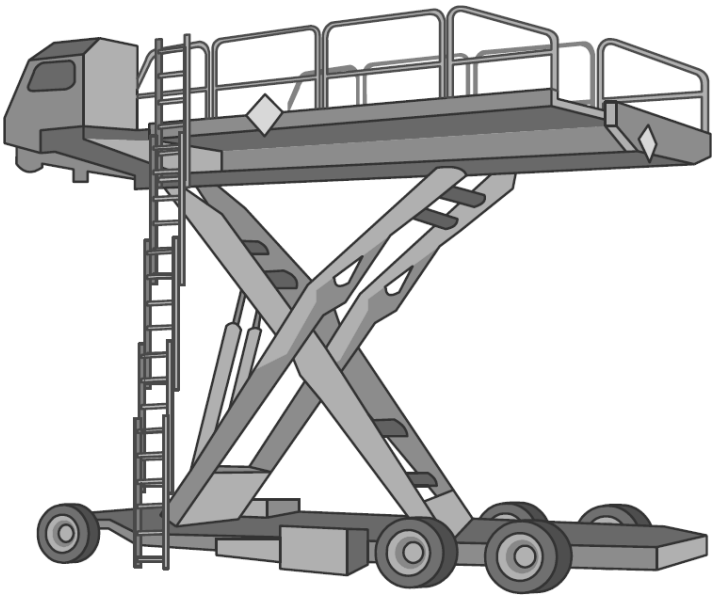

Halverson, Next Generation Small Loader

Halverson, Next Generation Small Loader (NGSL). The Next Generation Small Loader is a self-propelled air cargo transport/loader that supports all military cargo and CRAF aircraft. It is also air transportable on Air Force C-130, C-5, and C-17 military aircraft. The loaders will be used to move

cargo from loading areas to the aircraft and load and unload the aircraft themselves. The Halverson loader can lift and transport up to three pallets and up to 25,000 pounds. The deck can service floor heights from as low as 39 inches to 225 inches. It also has a power convey feature and will hold three 463L pallets in either a 108 or 88 bias.

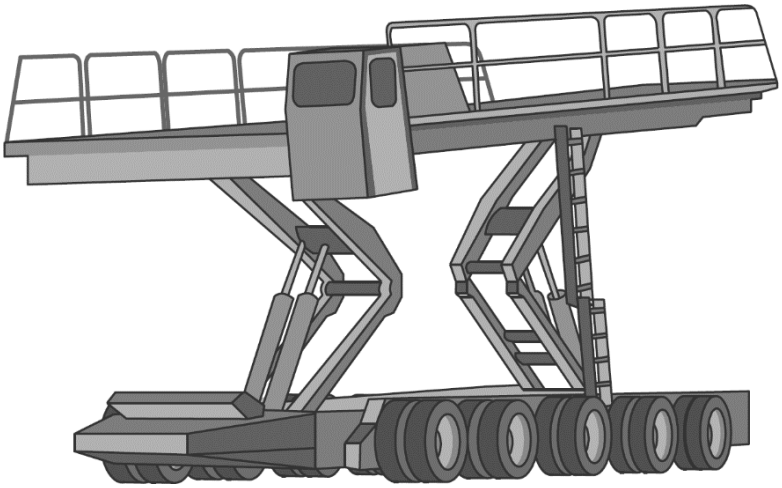

60K (Tunner) Loader

60K (Tunner)-loader. The 60K loaders have increased capacity over the 25K and the Halverson, Next Generation Small Loader (NGSL). It can be used to service all military and civilian aircraft. It is air transportable on C-5 and C-17 aircraft. When airlifted, it does not require the use of any shoring. The 60K loader can lift and transport up to six pallets and up to 60,000 pounds.

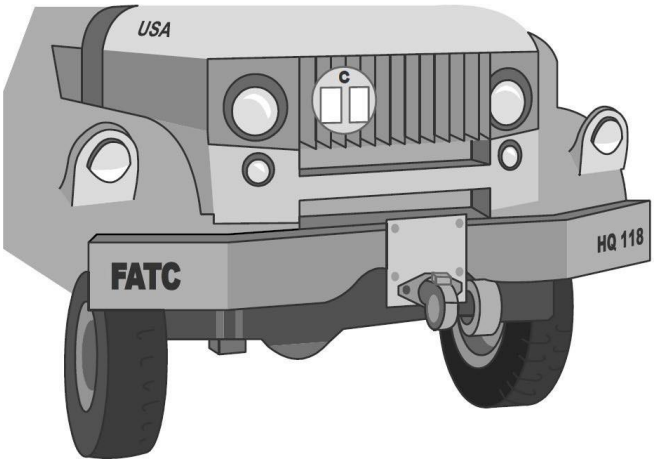

Front Mounted Pintle Hook

Pusher Vehicles. A pusher vehicle is any vehicle modified with a front-mounted pintle hook. These vehicles aid dramatically in loading trailers on military cargo aircraft. Pusher vehicles allow the driver to view the trailer as it moves into the aircraft. This is quicker and safer than having the driver back the trailer onto the aircraft. The best vehicles to use as pusher vehicles are M-Series vehicles or the MHE 237, US Marine Corps 4K RT forklift. There is one primary restriction. **Do not exceed the pusher vehicle's cargo capacity.** This ensures that the trailer is always under control.

Rollerized Flatbed Trucks/Trailers. Rollerized flatbed trucks/ trailers come in various sizes, lengths, and capacities. Roller conveyors can be attached to the bed to accommodate cargo build-up, transportation, and loading of 463L pallets. These flatbeds help with the speedy handling of palletized cargo, especially when K-loaders is not available.

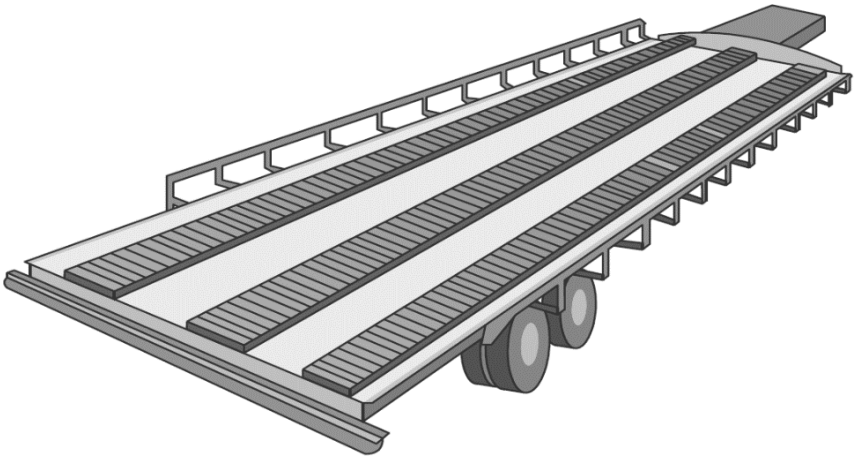

Rollerized Flatbed Truck/Trailer (typical)

MHE HOMEWORK

1. Repositioning MHE from AMC and other Air Force bases to on-load locations is expensive, time-consuming, and occupies a tremendous amount of available airlift cargo space. For these reasons, _____ have a responsibility (as the _____ of airlift) to provide as much MHE from local sources as possible.

2. With the tines (forks) removed and the addition of a front-mounted pintle hook, the 4K forklift makes and excellent _____ _____.

3. The 10K-standard forklift is capable of loading the _____, and _____ aircraft.

4. The 25K-loader is a _____-_____ cargo transportation platform. It can lift and transport _____ 463L pallets up to a maximum cargo weight of 25,000 pounds.

5. A _____ is any vehicle modified with a front mounted pintle hook.

PALLETIZATION

The objective of this lesson is for students to comprehend how to prepare cargo for movement in the 463L system properly.

Test Objectives: Describe the various systems used to facilitate cargo movement.

Explain the characteristics that make up the 463L pallet and nets.

Describe the proper procedures for storing and handling 463L pallets and nets.

Give examples of proper pallet build-up procedures.

References: AFI 24-605 Vol. 2, Air Transportation Operations

DOD 4500.9-R Part III, Mobility, Defense Transportation Regulation (DTR)

Web Pages: http://www.transcom.mil/j5/pt/dtr.cfm

Palletization

463L System. In 1957, the USAF adopted a standardized system to facilitate the rapid movement of general cargo aboard airlift aircraft. This 463L system encompasses all aspects of cargo loading. This includes materials handling equipment, cargo loading platforms, restraint equipment, and in-aircraft systems. The 463L system is the Air Force standard for the movement of cargo. The system is extremely efficient and can reduce ground times by 75 percent. Your first encounter with the 463L system will probably be the 463L cargo pallet. This chapter explains how to build, use, transport, and care for these pallets.

Dual-Rail System. The dual rail system is permanently installed in all airlift/463L capable military aircraft, with the exception of the KC-135. The KC-135 can be fitted with the dual rail system, but the roller system must be requested before the aircraft leaves the home station. This dual rail system consists of rows of rollers that allow easy movement of the palletized cargo into the aircraft. Many of these rollers are stowable to convert the cargo deck to a flat, clear loading surface for wheeled cargo. The side rails guide the pallets into the aircraft and provide lateral and vertical restraint. These rails have detent locks that prevent forward and aft movement of pallets during flight.

Pallets. The 463L cargo pallet is made of corrosion-resistant aluminum with a soft wood core framed on all sides by aluminum rails. The rails have 22 steel tie-down rings attached so that six rings are on each long side and five rings are on each short side. The rails also have indents (notches) designed to accept the detent locks. These locks are located on numerous materials handling equipment and are found on board all capable airlift aircraft. The overall dimensions of the 463L pallet are 88 inches by 108 inches by two ¼-inch thick. However, the usable dimensions of the upper surface are 84 inches by 104 inches. This allows for 2 inches around the periphery of the pallet to attach straps, nets, or other restraint devices. An empty 463L pallet weighs 290 pounds (355 pounds with nets) and has a maximum cargo carrying capacity of 10,000 pounds when using nets. The desired load capacity is 7,500 pounds to prolong pallet life. Numerous pallets weighing less than 7,500 pounds may be wasting valuable aircraft ACL (Allowable Cabin Load) and limited space. The pallet is restricted to 250 P.S.I. limitation.

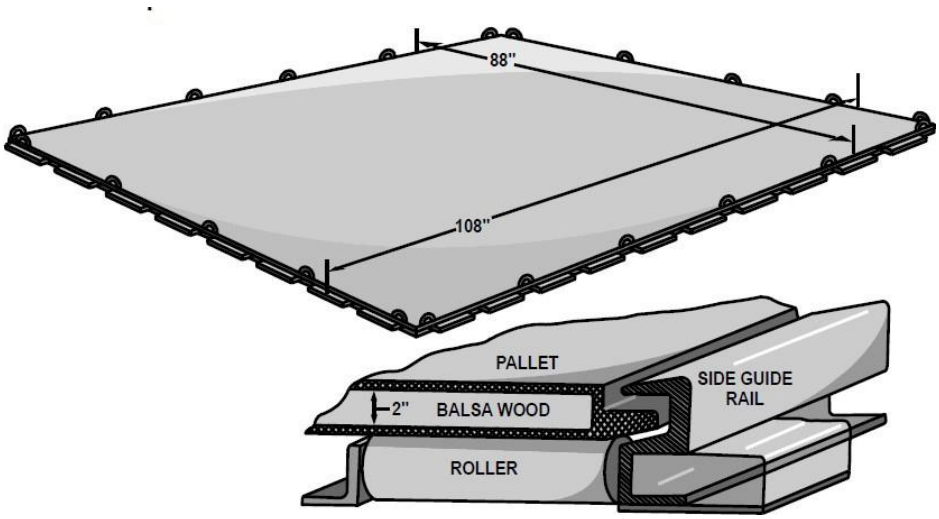

463L Pallet Construction

Pallet Nets. There are three nets to a set; two side nets and one top net. The side nets are green (usually) in color, and the top net is yellow (usually). The side nets attach to the rings of the 463L pallet, and the top net attaches by hooks to the side nets. These nets have multiple adjustment points and may be tightened to conform snugly to most loads. A complete set of 463L nets will provide adequate restraint for 10,000 pounds of cargo when properly attached to a 463L pallet, with a height not exceeding 96 inches above the surface of the pallet. The 463L nets will also provide adequate restraint for 8,000 pounds of cargo with heights above 96 inches (not to exceed 100 inches) above the surface of the pallet. A complete set of 463L nets (2 side nets and 1 top net) weighs 65 pounds.

463L Side Net (normally green in color)

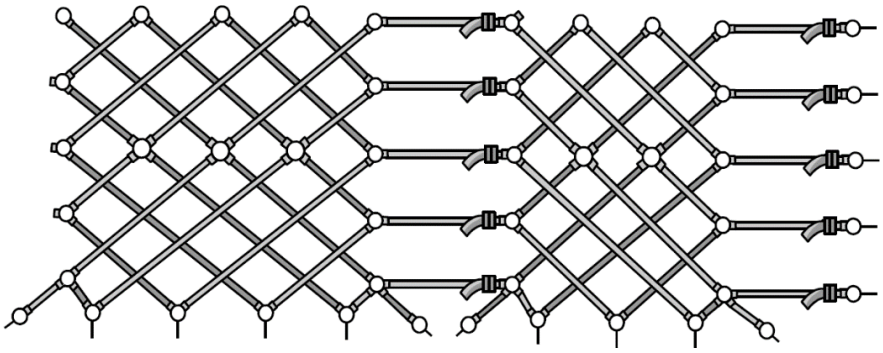

463L Top Net (usually tan in color)

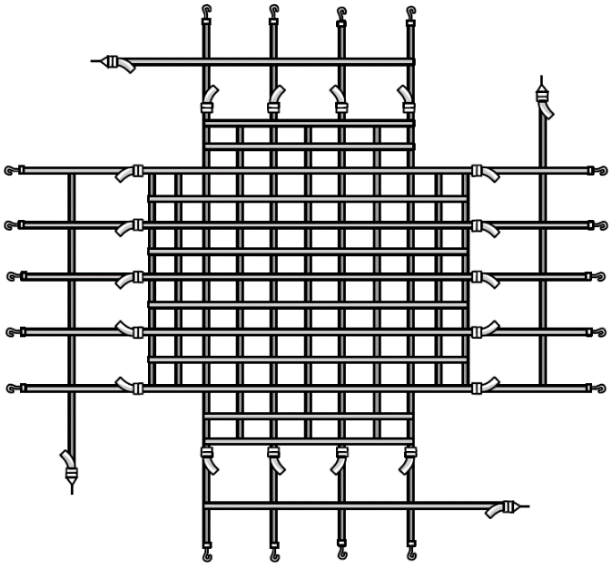

If items of cargo are not tall enough for the installation of the complete net set, two other options are available:

Side nets and seven straps. The side nets can be used with seven straps instead of the top net if the cargo isn't tall enough to secure the top netting to the side nets properly. Four on the long side (108") and three on the short side (88"), hooked to the highest side net ring possible. This configuration of straps cinches the side nets up and provides vertical restraint for the cargo. The seven-strap option can restrain 10,000 lbs. of cargo to a 463L pallet.

Top net only. The top net can provide adequate restraint for low profile cargo items (up to 45" tall) weighing up to 2,500 lbs. Items taller than 45" or weighing more than 2,500 lbs. require supplemental lateral, forward, and aft restraint.

Storage and Handling. The 463L pallets and nets are expensive to purchase and refurbish. With reasonable care and protection, they should last almost indefinitely. The procedures to care for these pallets and nets are simple. Always follow these guidelines:

Dunnage. Always put adequate dunnage under 463L pallets. (Fig. 2.4.) This will aid in the movement of the pallets and protect the lower surface from damage. Dunnage is normally lumber or timbers placed under 463L pallets to prevent damage to the lower pallet surface and aid transportation with a forklift. The minimum dimensions of each piece of dunnage are 4" X 4" X 88" long. Use three parts to support each loaded 463L pallet while on the ground. Use three pieces to help each loaded 463L pallet while on the ground. If you use wood, it must meet requirements IAW DTR Part II, chapter 208.
NOTE: ***All pallets are required to be shipped with dunnage.*** *This is necessary for both deployment and redeployment and* ***must be provided by the user.***

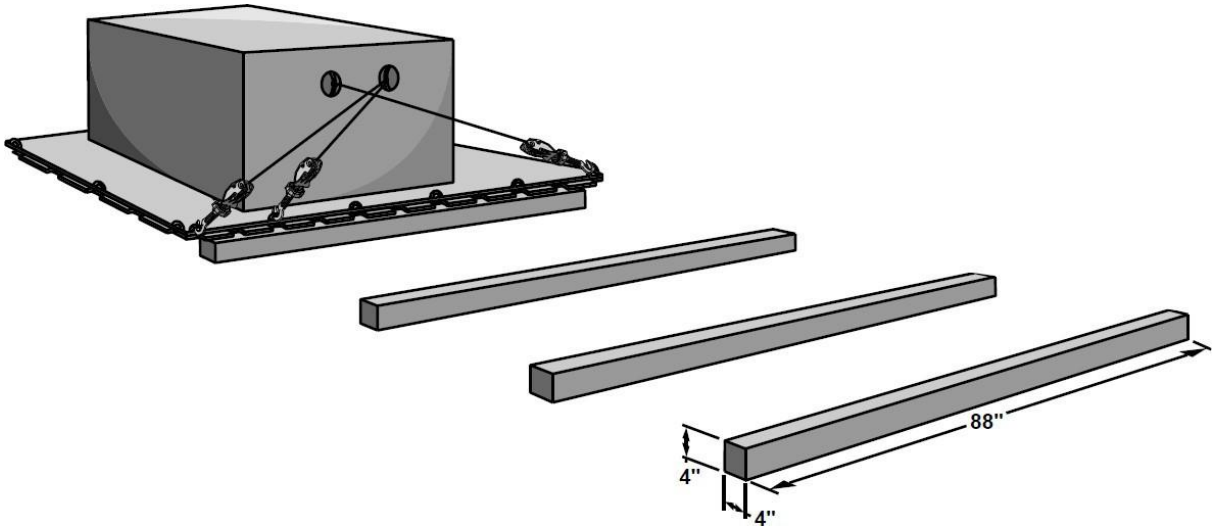

Dunnage

Empty pallets may be stacked 20 high (above a base pallet) for air shipment (except the KC-10, which concentrated cargo limitations may limit). Only a single stack of 20 pallets or less, adequately restrained by 463L nets, may be transported by air. Place three pieces of dunnage between the base pallet and the first pallet of the stack. The minimum thickness of the dunnage must be 4-inches to afford access for forklift tines. This also provides clearance for the aircraft's dual-rail system. Stacks of empty pallets up to 50 high are authorized for a unit, APOE, and APOD storage areas, provided they are adequately supported (3 pieces of dunnage, typically between stacks of 10). Never stack empty pallets upside down. This could damage the rings or the aluminum-skinned surface.

Always protect the upper surface of the pallet from sharp-edged cargo. If the car-go has sharp edges or protrusions, place adequate shoring or cushioning materials between the cargo and the pallet.

Be careful when transporting 463L pallets with a forklift. The tine tips can easily damage the pallet surface, making it unusable.

Never push or slide 463L pallets across any solid surface. To do so will cause damage to the skin.

Protect nets from adverse weather conditions. The netting materials will mildew and deteriorate. The metal hooks will also rust if not properly cared for. Hang and dry all nets after use. Never pile wet nets together for storage.

Inspection. Inspect pallets and nets to ensure serviceability. Do not use pallets if the aluminum skin is separating or punctured. The skin-to-rail bond is an important portion of the pallet's strength. Pallets shall be level and not warped. You may use pallets with minor dents, gouges, and scratches that do not fracture the skin. The pallet will not be accepted for air shipment for more extensive damage (such as bent rails or damaged/missing tie-down rings). It must be sent to the depot for repairs. Keep pallets as clean as possible to protect the cargo and prevent the spread of insects, dirt-born infestations, etc.

Pallet Build-up. Palletize cargo from the heaviest to the lightest items. Distribute large and heavy objects evenly from the center of the pallet outward. This will prevent the pallet from becoming heavy on one end. This also helps maintain the center of balance at or near the center. Place lighter and/or smaller items on top or along the side of the heavier cargo. Containers marked *this side up* must be placed upright, and cargo with special labels should have the labels facing outward. Construct the load in a square or pyramid shape when possible. Do not allow cargo to extend beyond the vertical stacking line (84 x 104 inches) of single netted pallets. This makes the load stable, easy to handle, and easy to secure to the pallet, preventing binding in the aircraft 463L dual rail system. Hazardous materials must be placed on the pallet with the label visible and never buried.

NOTE: *Each aircraft has size and shape restrictions that must be considered. For example, aisle-ways are required on pallets destined for pallet positions three and four in a C-130 aircraft. Check the particular requirements of the aircraft for which the load is prepared.*

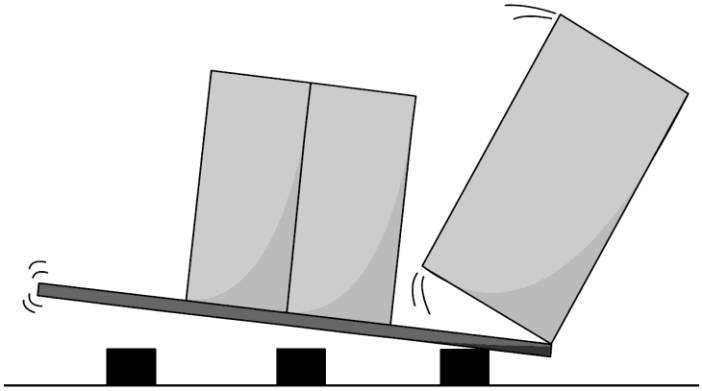

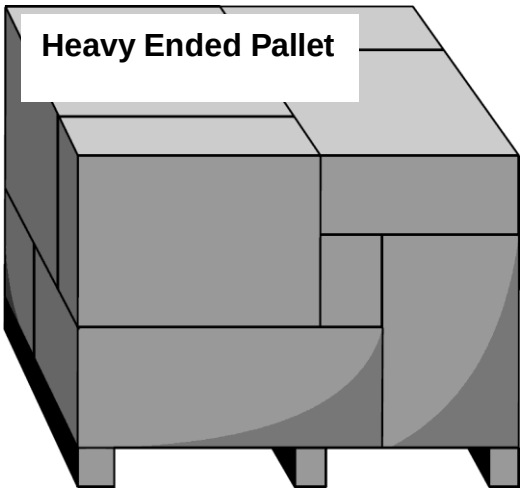

463L Pallet Cargo Placement (square)

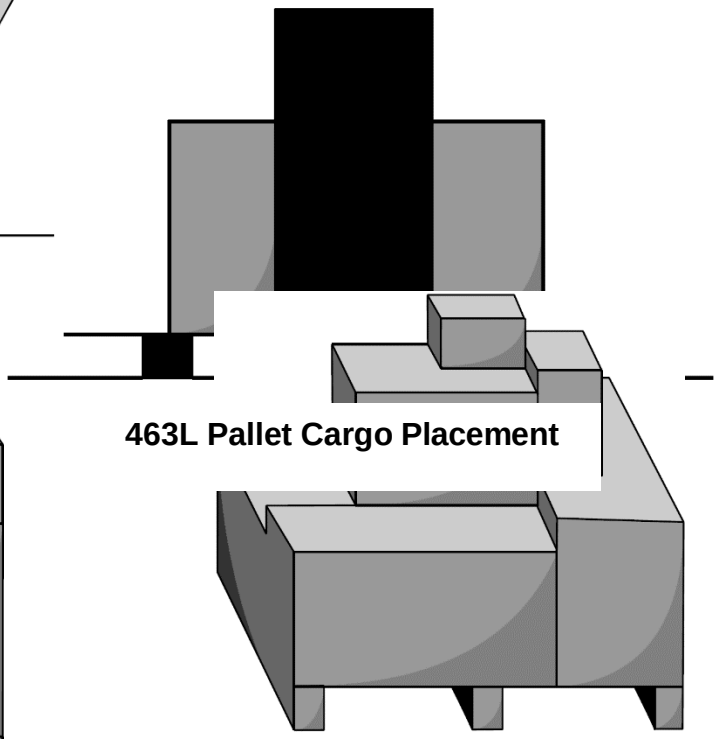

463L Pallet Cargo Placement (pyramid)

Pallet Build-up Procedures Checklist

a) Are you prepared to follow good safety practices?

b) Do personnel have steel toed safety shoes and work gloves?

c) Have personnel been briefed on proper lifting techniques?

d) Is the pallet skin free of damage, top and bottom, and any bent lips on the pallet perimeter?

e) Are tie down rings serviceable?

f) Is the pallet level and not warped?

g) Is the pallet free of corrosion?

h) Is the pallet clean and free of dirt?

i) Is the pallet right-side up?

j) Is the pallet placed on three-point dunnage?

k) Is cargo to be placed on the pallet securely packaged?

l) Does cargo have required markings?

m) Is the DD Form 1387-2 properly prepared for any classified item and sensitive cargo requiring protective service or other special services?

n) Are HAZMAT labels prepared and attached to hazardous cargo or their containers IAW AFMAN 24-604(I), TM 38-250, MCO P4030.19I, NAVSUP Pub 505, DLAI 4145.3, and DCMAD 1, CH 3.4 (HM24)?

o) Is cargo marked with arrows, (e.g., *This Side Up*, placed with arrows pointing up)?

p) Are hazardous items on pallet or within an ISU/freight container compatible IAW AF-MAN 24- 604(I), TM 38-250, MCO P4030.19I, NAVSUP Pub 505, DLAI 4145.3, and DCMAD 1, CH 3.4 (HM24)? Are hazardous items —Chapter 3 approved?

q) Is all hazardous cargo positioned for easy access during flight IAW AFMAN 24-604(I), TM 38- 250, MCO P4030.19I, NAVSUP Pub 505, DLAI 4145.3, and DCMAD 1, CH 3.4 (HM24)? Are hazardous cargo labels visible from an 88-inch side of the pallet? Do the doors of mobility bins containing hazardous items open to an 88-inch side of the pallet? NOTE: Consult aircraft Dash 9 for requirements. Pallets on the C-17, when utilizing the Logistics Rail System, are loaded 88 inch side first, (long ways), which can effect access to HAZMAT during flight.

r) Is the scale weight attached to one 88-inch side and one 108-inch side of the pallet (reflected on the DD Form 2775 and/or Military Shipping Label)? Ensure that scale weights are accurately recorded on all associated forms (e.g. Load Plans, Manifests, etc.)

s) Is cargo arranged on the pallet to meet the following criteria?
- Are the heavier boxes and crates placed on the bottom of the pallet load?
- Is lighter, more fragile cargo placed on the top of the pallet load?
- Is the cargo arranged and properly stacked so that it is stable?

t) Is the height of the built-up pallet 96-inches or less from the top skin of the pallet? If it is not and the height cannot be reduced to under 96-inches, consult your affiliated Air Movement Control Unit for guidance to determine if the pallet will fit inside the aircraft. Is the cargo loaded so it is no more than 104-inches wide with no overhang over either of the 108-inch sides?

u) Is the pallet loaded with no more than 10,000 lbs. of cargo? Is pallet loading limited to less than 250 lbs. per square inch on the pallet's surface? Is plywood or cardboard used on pallet surface when cargo has sharp edges?

v) Is cargo susceptible to weather damage? If so, is a plastic pallet cover used before installing cargo nets?

w) Is cargo secured to the pallet using two side nets and a top net? If low profile cargo does not permit the use of side nets (and weight does not exceed 2,500 lbs. and cargo height does not exceed 45 inches from the surface of the pallet), is restraint provided by a minimum of seven straps (four longitudinal and three lateral)?

x) Does the top net have five serviceable clips? Does each side net have five serviceable hooks along each side of its length, four along each side of its width, and one at each corner? Are nets free of tears, rips, and broken rings?

y) Is dunnage (three pieces) provided for each pallet?

z) Are keys or combinations provided to any locked containers?

aa) Is a copy of the ATTLA air transportability certification for vehicles and equipment, if required, available? Is shoring required by certification available? p. Are the scale weight attached to one 88- inch side and one 108-inch side of the pallet (reflected on the DD Form 2775 and/or Military Shipping Label)? Ensure that scale weights are accurately recorded on all associated forms (e.g., Load Plans, Manifests, etc.)

Married Pallets. In cargo movement, we often find odd shapes and sizes of cargo that require movement by air. The usable dimension of the 463L pallet is 104 inches by 84 inches. When there is a requirement to ship cargo exceeding these dimensions, you must join two or more pallets together. We refer to this as the marrying of pallets (we also refer to married pallets as double or two pallet trains). When joined, the same applies to three, four, five, or six pallets. Before marrying pallets, inspect them to ensure they are clean and in good repair. Ensure the rails are not bowed, and the tie-down rings are securely mounted. After checking the pallets, place them on a Highline/cargo dock, rollerized flatbed truck, or K-loader. Align the in-dents along the 108" side of each pallet.

NOTE: *Exceptions: KC-10/C-17 can be married on 88" and 108" side (KC-10 usually 88"). Install couplers between the pallets. The couplers are used to keep the pallets aligned and properly spaced to lock into the air-craft's rail systems. The KC-10 uses a unique 1" spacer and can only be utilized on two pallet trains (88" or 108" bias). Your affiliated AMCU may be able to help you get any required couplers.*

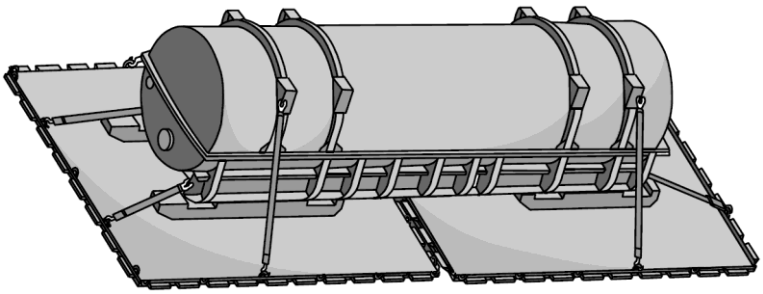

Two Pallet Train
(coupled on 88" bias)

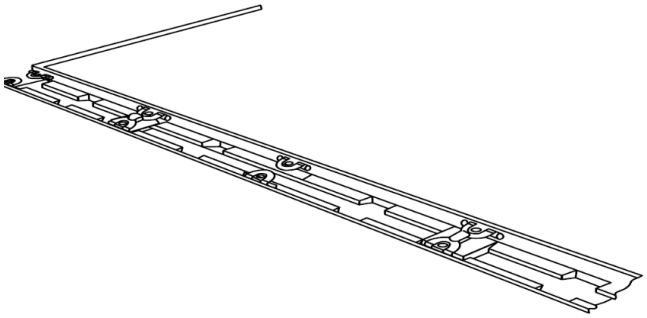

Pallet Spacers

Tie down Procedures. There are many procedures for tying down and lashing cargo. Some of the key points to remember are:

All equipment must be secured/restrained/tied down for the rigors of flight (e.g., turbulence, tactical landings, short-field takeoffs, etc.). The following restraint criteria apply to both the primary equipment (vehicles and trailers secured to the floor of the aircraft) along with secondary cargo (secured to the bed of vehicles and trailers): Forward Restraint - 3Gs Aft Restraint - 1.5Gs Lateral Restraint - 1.5Gs Vertical - 2Gs

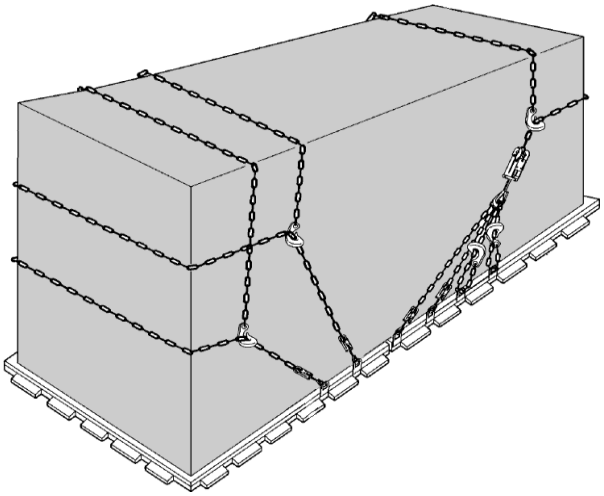

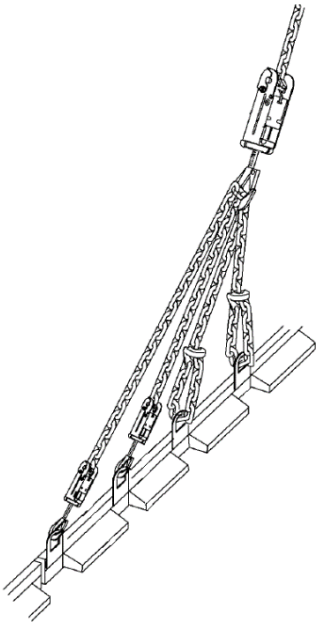

Chain Bridle

Use barrier and chain bridle for loose heavy items such as lumber and pipe. The minimum thickness for the barrier is ¾ inches (usually plywood). If cargo height exceeds 30”, apply two chain bridles on each end.

Use chains and tie down devices for oversized items such as canned engines or palletized wheeled items.

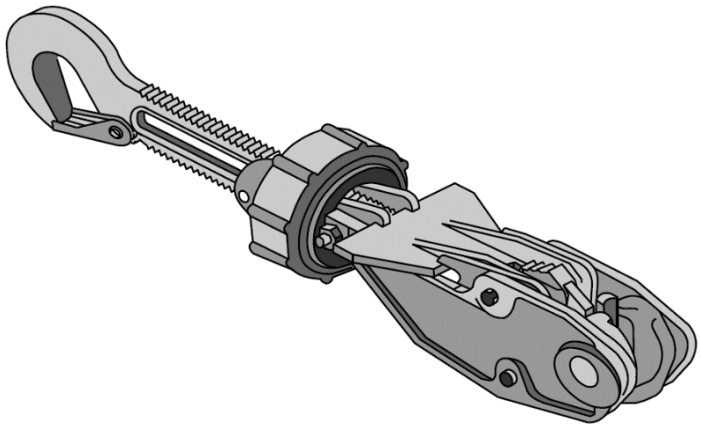

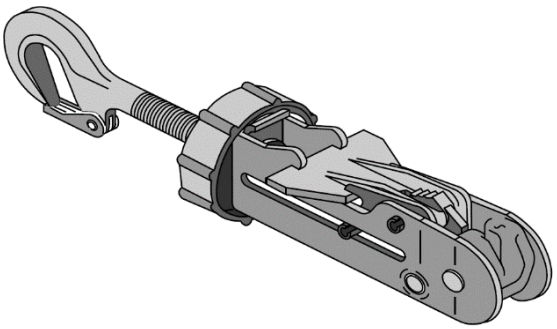

MB-2: 25,000-pound capacity and MB-1: 10,000-pound capacity tiedown devices

NOTE: *The MB-2 – 25,000-pound capacity tiedown device is not carried aboard the KC-135 and KC-10 aircraft.*

Do not attach more than half of the required restraint in a given direction to the axles of wheeled equipment. More than ½ of the required restraint applied to the axles will need the vehicle’s suspension to assume the majority of restraint, resulting in suspension failure and loose equipment in-flight.

Use 463L nets for multiple loose items that fit within the usable dimensions of a single 463L pallet.

Use chains for heavy items such as large boxes and vehicles.

Finally, use 5,000-pound tie down straps, as required, to provide supplemental restraint, individual item restraint, or supplemental restraint in conjunction with 463L pallet nets. Do not use a mixture of nylon straps and metal chains to provide restraint in the same direction for the same piece of cargo. The nylon can stretch, forcing the metal chain to assume the entire applied load, resulting in chain failure.

NOTE: Lateral restraint must be symmetrical.

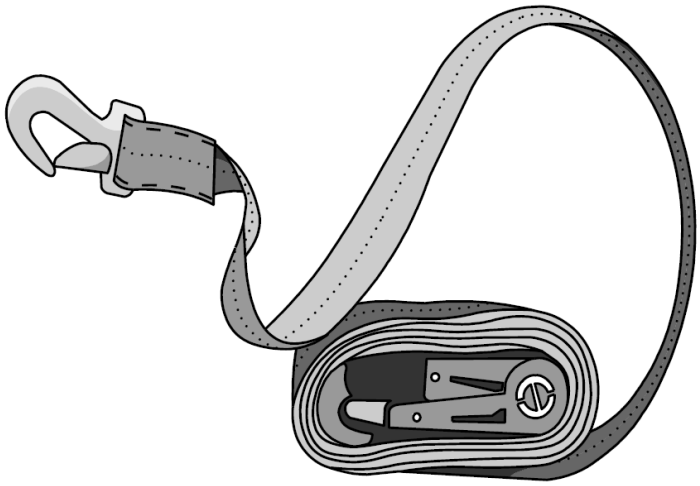

5,000 Pound Tie down Strap

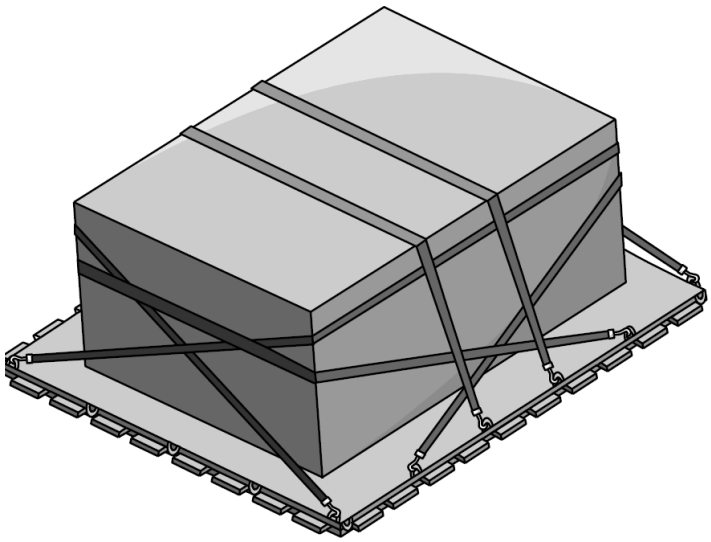

Cargo Restraint for all load directions

PALLETIZATION HOMEWORK

1. The overall dimensions of the 463L pallet are _____ inches by _____ inches by 2.25 inches thick. However, the usable dimensions of the upper surface are___ inches by _____ inches.

2. A complete set of 463L nets will provide adequate restraint for _____ pounds of cargo when properly attached to a 463L pallet, with height not exceeding _____inches above the surface of the pallet.

3. All pallets are required to be shipped with _____. This is required for both deployment and redeployment and must be provided by the _____.

4. Do not attach more than _____ of the required restraint in a given direction to the _____ of wheeled equipment.

5. Do not use a mixture of _____ _____ and _____ to provide restraint in the same direction for the same piece of cargo. The nylon can _____ forcing the metal chain to assume the entire applied load and could result in chain _____.

Joint Inspection

The objective of this lesson is for each student to comprehend the final inspection process before loading cargo aircraft.

Test Objectives:

Explain who can fill the mobility force inspector role

Summarize the roles and responsibilities of the deploying unit

Describe how to complete the DD Form 2133 correctly

References:

DOD 4500.9-R Part II, Shipper, Transhipper and Receiver Requirements and Procedures, Defense Transportation Regulation (DTR)

DOD 4500.9-R Part III, Mobility, Defense Transportation Regulation (DTR)

AFMAN 24-604

Joint Inspection Procedures

The deploying force is responsible for the proper preparation of materiel, including weighing, marking, labeling, palletization, and preparing all documentation (to include HAZMAT certification on the Shippers Declaration) before JI. The deploying force representative will declare and identify all hazardous cargo to the mobility inspector during JI of cargo.

Before aircraft loading, *a Joint Inspection will be performed by a qualified mobility force inspector* (e.g., Contingency Response Element (CRE), Cargo Deployment Function (CDF), Arrival/Departure Airfield Control Group (A/DACG) along with a representative from the *deploying force AND a hazardous cargo certification personalist*. The mobility force inspector must have, as a minimum, completed HAZMAT Inspector training required in AFMAN 24-604(I), TM 38-250, MCO P4030.19, NAVSUP Pub 505, DLAI 4145.3, and DCMAD 1, CH 3.4 (HM24). Also, the mobility force inspector must be knowledgeable of cargo, vehicle, and equipment preparation requirements specified *in DTR - Part III – Mobility - Appendix O- Preparation of Equipment and Supplies and Joint Inspection (JI) Procedures for Military Aircraft.* In addition to HAZMAT training, qualification standards for mobility force inspectors will be identified in Service/Major Command directives. *This course does NOT qualify you to become a Joint Inspector*.

All cargo is subject to inspection by the mobility force inspector and the aircrew. This will include a 100 percent inspection of all contents of containers/ISUs to ensure all cargo is secured correctly and any undeclared HAZMAT is correctly identified, manifested, prepared, packaged, marked, labeled, and certified IAW AFMAN 24-604. If the cargo is determined by the deploying force to be "sight-sensitive" and will be exempt from inspection, prior approval must be obtained from the Air Mobility Command (AMC) Director of Operations (AMC/A3) or Director of Logistics (AMC/A4) or the Service/Major Command having operational control of the aircraft.

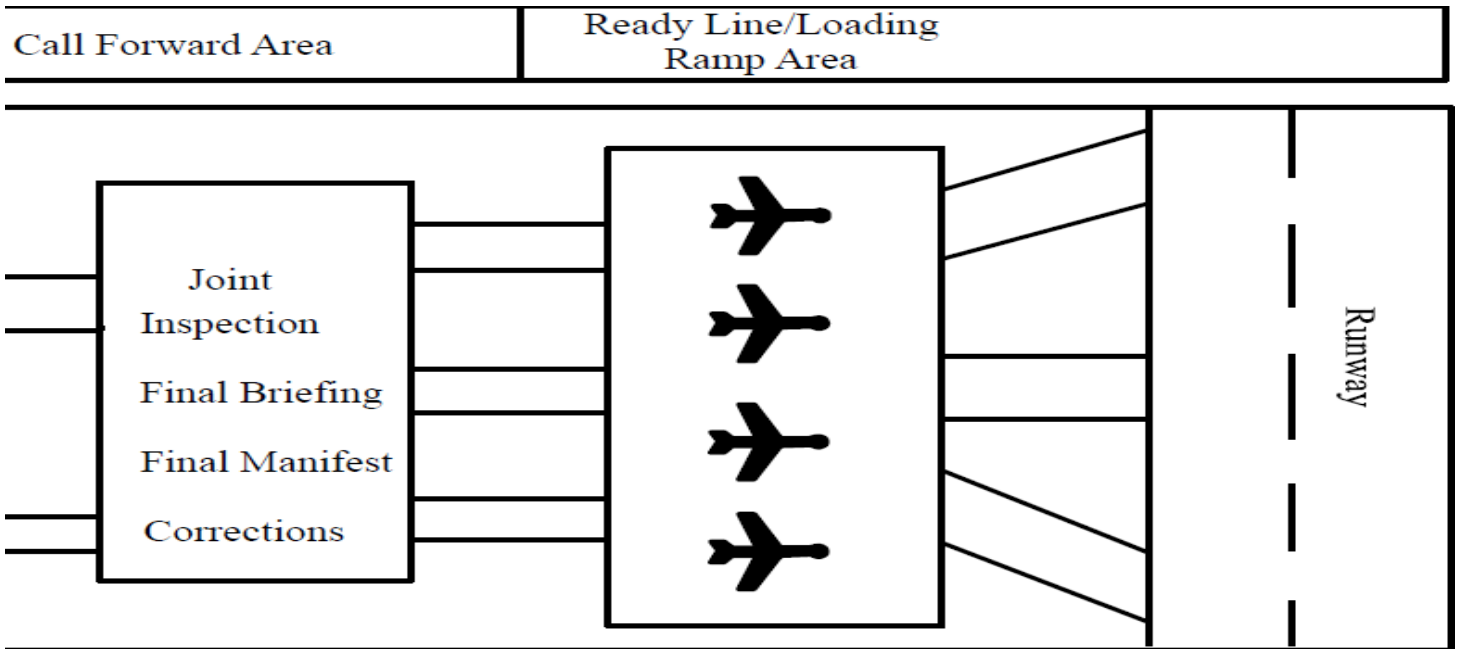

BY ORDER OF THE SECRETARIES OF THE AIR FORCE, THE ARMY, THE NAVY, THE MARINE CORPS, AND THE DEFENSE LOGISTICS AGENCY

AIR FORCE MANUAL 24-604
TM 38-250
NAVSUP PUB 505
MCO P4030.19J
DLAI 4145.3

9 OCTOBER 2020
TRANSPORTATION

PREPARING HAZARDOUS MATERIALS FOR MILITARY AIR SHIPMENTS

COMPLIANCE WITH THIS PUBLICATION IS MANDATORY

ACCESSIBILITY: Publications and forms are available on the e-Publishing website at **www.e-Publishing.af.mil** for downloading or ordering.

RELEASABILITY: There are no releasability restrictions on this publication.

OPR: AF/A4LR

Certified by: AF/A4L
(Brig Gen Linda S. Hurry)

Supersedes: AFMAN 24-204, 17 July 2017

Pages: 539

AFMAN 24-604/TM 38-250, MCO P4030.19, NAVSUP Pub 505, DLAI 4145.3, and DCMAD 1, CH 3.4 (HM24); provides instructions for preparation, packaging, and handling of HAZMAT for shipment aboard military aircraft. These instructions are intended to ensure such materials are adequately prepared for airlift. (See Appendix J.) Shipping organizations failing to declare and identify hazardous cargo may be subject to disciplinary action under the Uniform Code of Military Justice (UCMJ) and/or civil penalties outlined in CFR 49, Part 107, Subpart D, and Equipment.

DD Form 2133, Joint Airlift Inspection Record.

The DD Form 2133 will be filled out ***legibly*** to document that all cargo, vehicles, and equipment have been prepared adequately for air-lift. *The completed form will indicate to the aircrew that the required inspection has been accomplished*. *This form is used as the final Joint Inspection Document.* If no mobility force inspector inspects the cargo, the loadmaster or boom operator can conduct the final inspection. Three copies of the DD Form 2133 are produced. The Contingency Response Element (CRE) or Cargo Deployment Function (CDF), Arrival/Departure Airfield Control Group (A/DACG), and the Automated Cargo Manifest or Manual Cargo manifest (DD Form 1385) each receive a copy of the DD Form 2133. A DD form 2133 must accompany each aircraft load. *The original copy goes with the aircraft cargo manifest.*

Original
1._____

Second
2._____

Third
3._____

Completing DD Form 2133

Header (Blocks 1 – 10)

Set an additional page if the amount of cargo or increments assigned to the chalk surpasses one-page worth. The top right corner will have “page 1 of 1 page”, page 1 of 2 pages,” etc.

Item 1: DEPLOYING FORCE. Enter the numerical designation and geographic location of the military unit responsible for the equipment being airlifted (e.g., 14th Fighter Squadron, Kadena AB, Okinawa)

Item 2: DEPARTURE AIRFIELD. Enter the facility’s name the airlifted unit is departing (e.g., Langley AFB VA).

Item 3: DATE. Enter the year, month, and day the JI is accomplished.

JOINT AIRLIFT INSPECTION RECORD/CHECKLIST *(Reference DTR Part III Appendix O For Form Completion)*		Page of Pages
1. DEPLOYING FORCE:	2. DEPARTURE AIRFIELD:	3. DATE:

Item 4: AIRCRAFT TYPE AND MISSION NUMBER. Enter the type and mission number of the aircraft on which the equipment is to be loaded (e.g., C17/PMXA145EF075).

Item 5: LOAD/CHALK NUMBER. Enter the transported force assigned aircraft load number that establishes the desired load movement sequence (e.g., Chalk 1).

Item 6: START TIME. Enter the local time the JI started.

Item 7: COMPLETE TIME. Enter the local time load that was checked and is ready for movement.

Item 8: MOBILITY FORCE. Enter the unit's numerical designation having mobility force inspection responsible for the operating location.

4. AIRCRAFT TYPE AND MISSION NUMBER:	5. LOAD/CHALK NO.	6. START TIME:	7. COMPLETE TIME:	8. MOBILITY FORCE:

Item 9: CHAPTER 3 MOVEMENT: Place an “X” in the appropriate block to indicate whether or not the movement is authorized under AFMAN 24-604, Chapter 3. To determine whether or not a specific mission is authorized, Chapter 3 movement, review mission remarks in Global Decision Support System 2 (GDSS2) or Single Mobility System (SMS).

Item 10: INCREMENT/SERIAL/BUMPER NUMBER AND TYPE/TCN. Utilize one of the above to identify an individual shipment. (Must stay consistent for the entire JI)

9. CHAPTER 3 MOVEMENT		Yes		No	10. INCREMENT/SERIAL/BUMPER NUMBER AND TYPE/TCN											
LEGEND *(Mark blocks after each item as follows)*																
√ = Satisfactory																
X = Unsatisfactory																
Circle the " X " for items that have been corrected																
If not applicable, Enter " - " (Dash)																

Legend

(1) Place a checkmark for applicable inspection items that meet standards (Satisfactory).

(2) Place an **"X"** for applicable inspection items that do not meet standards (Unsatisfactory).

Place a ***circle*** around the **"X"** when inspection items have been corrected and are now in compliance with standards.

(3) *If an inspection item is not applicable to the item being inspected, place a* **"-"(Dash)** *in that block*.

11. DOCUMENTATION												
a. Pre-Load Plan												
b. Manifest/ Load List/Packing List												
c. Shippers Declaration for Dangerous Goods (SDDG)												
d. DD Form 1387-2												
e. Military Shipping Label *(2D Bar Code)*												
f. ATTLA Certification *(Reference DTR Part III, App O)*												
12. GENERAL REQUIREMENTS *(Applicable to Blocks 13, 14, 15)*												
a. Clean												
b. Fluid Leaks *(Reference DTR Part III, App O)*												
c. Scale Weight *(GW, Axle Weight, Marked on Both Sides)*												
d. Dimensions *(Fits Aircraft Contour)*												
e. Center of Balance *(Marked on Both Sides)*												
f. Keys/Combinations *(All Locks)*												
g. Shoring *(Floor/Roller Limitations)*												
h. Hazardous Materials Preparation/Packaging												

NOTE: **All blocks of sections 11 and 12 will be marked appropriately**;

However, blocks 13, 14, and 15 will only be utilized for the applicable items. (i.e., rolling stock will have block 13 marked appropriately, and blocks 14 and 15 will be left blank

13. VEHICLES/NON-POWERED EQUIPMENT
a. Mechanical Condition *(Engine Runs)*
b. Brakes Operational *(Service/Emergency)*
c. Battery *(Secured, Terminals Protected, No Leaks)*
d. Fuel Tank(s), Level, Caps
e. Jerricans *(Secure, Fuel Level, Seal)*
(1) DOT 5L *(Metal)* MUST BE EMPTY
(2) UN Specification *(Plastic)*
f. Tiedown Points/Clevises *(Serviceable)*
g. Pintle Hooks *(If Used)*
h. Vehicle Equipment Secured
i. Tire Pressure
j. Accompanying Load *(w/in Rated Capacity and Secured)*
k. Lox/Nitrogen Cart *(Vent Kit)*
14. PALLETS/PALLET TRAINS/ISU'S
a. Serviceable *(Pallet and Tiedown Rings)*
b. Correctly Built/Items Secured
c. Dunnage *(3 Pieces Per Pallet or ISU)*
15. HELICOPTERS *(Flyaway)*
a. Fuel Quantity *(As Required)*
b. Configuration *(T.O./Cert Letter)*
c. Battery *(Disconnected, Covered/Taped)*
d. Special Loading Equipment *(Tow bars, etc.)*
e. Accompanying Load *(w/in Rated Capacity and Secured)*

Documentation Body (Block 11)

(1) **Item 11 a: PRE-LOAD PLAN**. The deploying force will provide a pre-load plan. The mobility force inspector will ensure the entire load is accounted for utilizing the pre-load plan.

(2) **Item 11 b: MANIFEST/LOAD LIST/PACKING LIST**. The deploying force will provide these documents to the mobility force inspector. The mobility force inspector will utilize these documents to assist in verifying/locating any undeclared hazardous shipments.

(3) **Item 11 c: SHIPPERS DECLARATION FOR DANGEROUS GOODS (SDDG).** The deploying force will submit SDDGs for all hazardous cargo presented for movement. The mobility force inspector will inspect the SDDG for proper preparation and certification IAW AFMAN 24-604.

(4) **Item 11 d: DD FORM 1387-2.** The deploying force will submit this document for all items requiring signature service, transportation protective service, or any other kind of special services. See the DTR Part II, Chapter 205 for guidance on proper completion.

(5) **Item 11 e: MILITARY SHIPPING LABEL (2D Bar Code).** All items presented for movement will have a military shipping label attached. See the DTR Part III, Appendix H for additional information.

(6) **Item 11 f: ATTLA Certification**. An ATTLA letter is required for vehicles and equipment not listed in applicable aircraft Dash 9 TO. Follow the link in Paragraph A.1 of this appendix to determine ATTLA requirements. e. General Requirements

General Requirements (Block 12)

12. GENERAL REQUIREMENTS *(Applicable to Blocks 13, 14, 15)*												
a. Clean												
b. Fluid Leaks *(Reference DTR Part III, App O)*												
c. Scale Weight *(GW, Axle Weight, Marked on Both Sides)*												
d. Dimensions *(Fits Aircraft Contour)*												
e. Center of Balance *(Marked on Both Sides)*												
f. Keys/Combinations *(All Locks)*												
g. Shoring *(Floor/Roller Limitations)*												
h. Hazardous Materials Preparation/Packaging												

(Block 12) Inspection items listed in this area may apply to Vehicles/Non-powered Equipment, Pallets/Pallet Trains/ISUs, and Helicopters. **NOTE: This block is applicable to blocks 13, 14, and 15.**

1. **Item 12 a: Clean each item to ensure they are free of all grime, oil, soil, pest infestation, and prohibited agricultural items.** Pressure wash (minimum 90 psi) or steam clean items if necessary. Ensure all vehicle tires are free of debris (rocks, pebbles, sand) embedded in the treads. See DTR Part V, Chapter 505 for additional agriculture cleaning and inspection requirements.

2. **Item 12 b: FLUID LEAKS:** A loss of fluid at a readily detected or seen rate is a leak. Five drops or more per minute from a cooling system, crankcase, or gear case is a leak. Fuel or brake system leaks, no matter how minor, will prevent air shipment until corrective action has been accomplished. Do not consider a damp or discolored seal a leak unless any of the above conditions exist.

3. **Item 12 c: SCALE WEIGHT:** Ensure gross weight/axle weights are accurate and properly marked on both sides for vehicles/non-powered equipment and helicopters. Pallets will be placarded on two adjacent sides with the scale weight.

4. **Item 12 d: DIMENSIONS:** Ensure item fits aircraft profile/contour. Item must negotiate the aircraft ramps and interior dimensions and will not come in contact with the aircraft floor, sidewalls, or ceiling. Consult applicable aircraft Dash 9 to ensure pallet position restrictions are met (i.e., aisle ways, pallet heights on aircraft ramps).

5. **Item 12 e: CENTER OF BALANCE.** If applicable, ensure the item is clearly/marked adequately on both sides. Indicate the Center of Balance (CB) to the nearest whole inch. Consult the DTR Part III, Appendix P, for CB calculation/determination.

6. **Item 12 f: KEYS/COMBINATIONS** (All Locks). If an item is secured with a lock, the keys or combination will be available to the mobility force inspector. The keys/combination will be attached to the item during transport or provided to the aircrew in the aircraft manifest package. **NOTE: Locks without keys/combos will be removed from the item, or the item will be removed from chalk**.

7. **Item 12 g: SHORING.** Check that all shoring is serviceable and immediately available. Check

floor/roller limitations to ensure neither is exceeded. Consult applicable aircraft Dash 9 TO or ATTLA certification for shoring calculation and requirements.
8. **Item 12 h: HAZARDOUS MATERIALS PREPARATION/PACKAGING.** Check that all HAZMAT submitted for movement is correctly prepared, positioned, and compatible with other HAZMAT on the same aircraft IAW AFMAN 24-604. Check that all HAZMAT is correctly secured.

Vehicles/Non-Powered Equipment (Block 13)
This section applies to vehicles/non-powered equipment palletized or loaded as rolling stock on aircraft.

1. **Item 13 a: MECHANICAL CONDITION.** Unless a vehicle is shipped as retrograde cargo, it must be in good condition. Ensure self-propelled vehicles are operational (engine runs).

2. **Item 13 b: BRAKES OPERATIONAL.** Check service and emergency brakes for operation. Check brakes by having the operator demonstrate braking capability while the vehicle is moving.

3. **Item 13 c: BATTERY.** Ensure battery terminals are adequately protected to prevent damage or short circuits (e.g., rubber covers, taped). Ensure the battery is secured to avoid damage or a short circuit.

4. **Item 13 d: FUEL TANKS, LEVEL, CAPS.** Vehicles and self-propelled units will not exceed one-half (1/2) a tank of fuel unless “Chapter 3” has been approved (see the DTR Part III, Appendix J). If “Chapter 3” is approved, tank fuel levels will not exceed three quarters (3/4). Wheeled engine-powered Support Equipment (SE) will be drained to the greatest extent unless “Chapter 3” has been approved. If “Chapter 3” is approved, fuel levels will not exceed one-half (1/2) regardless of the unit’s position in the aircraft. Ensure fuel caps are installed. On closed fuel system equipment, loosen caps to allow pressure equalization. (a) In no case will a vehicle with more than one-half (1/2) fuel tank be loaded on the aircraft cargo ramp. (b) Vehicles and SE loaded on the aircraft cargo ramp must be positioned with fuel tank filler openings on the high side of the ramp. (c) SE mounted on a single axle disconnected from its prime mover and loaded with its tongue resting on the aircraft floor must be drained but need not be purged. (d) Regardless of “Chapter 3” approval,

13. VEHICLES/NON-POWERED EQUIPMENT												
a. Mechanical Condition *(Engine Runs)*												
b. Brakes Operational *(Service/Emergency)*												
c. Battery *(Secured, Terminals Protected, No Leaks)*												
d. Fuel Tank(s), Level, Caps												
e. Jerricans *(Secure, Fuel Level, Seal)*												
(1) DOT 5L *(Metal)* MUST BE EMPTY												
(2) UN Specification *(Plastic)*												
f. Tiedown Points/Clevises *(Serviceable)*												
g. Pintle Hooks *(If Used)*												
h. Vehicle Equipment Secured												
i. Tire Pressure												
j. Accompanying Load *(w/in Rated Capacity and Secured)*												
k. Lox/Nitrogen Cart *(Vent Kit)*												

do not exceed one-half (1/2) tank of fuel for units loaded aboard aircraft with a steep angle of ascent (i.e., KC-10, KC-135).

5. **Item 13 e 1-2: JERRICANS.** (a) Dot 5L Jerricans must be in approved racks, secured to the vehicle or support equipment, and completely drained. (b) United Nations (UN) performance specification jerricans are authorized for transporting flammable liquid fuel stocks. Ensure all racks attached to vehicles or support equipment are designed to accommodate and secure jerricans to

prevent movement or leakage during the airlift. Jerricans must have a serviceable gasket in place on the screw cap closure. Jerrican(s) can be utilized to ship bulk fuel.

6. **Item 13 f: TIE-DOWN POINTS.** Ensure all clevises and tie-down points are serviceable. Include interior and exterior cargo restraint tie-downs in the inspection.

7. **Item 13 g: PINTLE HOOK(S).** Ensure all devices are serviceable if a Pintle Hook is utilized for loading/unloading or in-flight for trailers. Ensure all required pins or cotter keys are correctly installed and serviceable. Pins or cotter keys must be attached to the pintle hook using a chain or similar device.

8. **Item 13 h: VEHICLE EQUIPMENT SECURED (i.e., Tools, Tires).** Ensure all vehicle accessory items are secure. This includes fire extinguishers, seats\brackets, and any loose equipment that could become a projectile during flight.

9. **Item 13 i: TIRE PRESSURE.** Check to ensure tire pressure is within the manufacturer's specifications on the tire's sidewall. Tires must be sufficiently inflated to prevent wheel-rim contact with the aircraft floor.

NOTE: Maximum tire pressure is 100 PSI. When a tire pressure exceeds 100 PSI, it is considered a steel wheel or hard rubber wheel. Reference the applicable aircraft Dash 9 TO or ATTLA certification for guidance on required shoring.

10. **Item 13 j: ACCOMPANYING LOAD.** All items must be within vehicle/equipment's rated capacity and secured to vehicle/equipment. Typically, this information is located on the vehicle data plate or manufacturer's technical publication. Unless the cargo can be properly restrained, do not exceed the sidewall height (e.g., truck bed or trailer walls). Equipment permanently installed in a vehicle will be transported as a vehicle load regardless of height. This provision does not include signal shelters or other easily removed equipment. Check that all secondary cargo (consider all locally manufactured modifications as secondary cargo) is correctly secured to the vehicle and/or accompanying trailers. The cargo must meet the same restraint criteria required for the vehicle. Use a minimum of one-half (1/2)-inch diameter rope (not nylon) or approved cargo restraint systems to secure the cargo. Ensure rope actually touches the cargo, not just holds the side racks down. See the DTR Part III, Appendix H, Paragraph D.3 restriction if HAZMAT is not secured in approved holders or authorized in technical directives (i.e., TO, Field Manual, and Training Manual). **NOTE: Check to ensure Shelters and Generators mounted on vehicles and/or trailers have all bolts/nuts installed as applicable.**

11. **Item 13 k: LOX/NITROGEN CART (Vent kit required).** Ensure all vent kit materials are with the cargo. Technicians will be required at load time to install the vent kit.

Pallets/Pallet Trains/ISUs (Block 14)

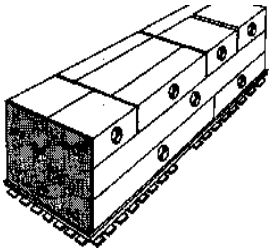

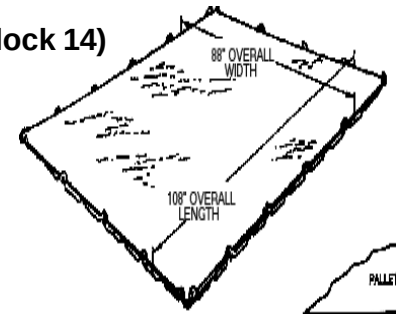

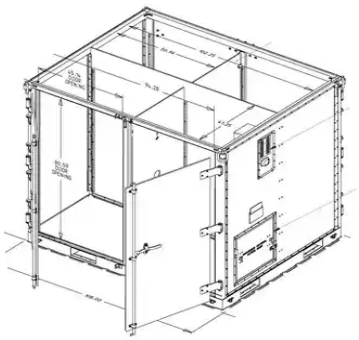

14. PALLETS/PALLET TRAINS/ISU'S												
a. Serviceable *(Pallet and Tiedown Rings)*												
b. Correctly Built/Items Secured												
c. Dunnage *(3 Pieces Per Pallet or ISU)*												

1. **Item 14 a: SERVICEABLE (Pallet, Tie-down Rings, Nets).** Pallets must be thoroughly cleaned and inspected (top and bottom) for missing and/or cracked D rings, warping, exposed core, and/or delamination.
(a) Inspect tie-down equipment used to restrain cargo to the pallets for damage. Do not use damaged tie-down equipment. (b) Inspect nets for damage (e.g., cuts, frays, missing components). Do not use damaged nets.

2. **Item 14 b: CORRECTLY BUILT/ITEMS SECURED.** (a) Check to ensure cargo nets are properly installed. (b) When nets are not used or additional restraint is required, ensure chains, tie-down devices, or straps are properly installed. Ensure adequate restraint is provided to transport cargo to aircraft safely. Attach tie-down equipment in pairs (i.e., if devices, chains, or straps are used on one side of the pallet, use an equal number of devices, chains, or straps on the opposite side). (c) All cargo within ISUs and other freight containers must also be secured/restrained to prevent movement and damage during flight. **NOTE: All HAZMAT must be accessible and secured/restrained to prevent movement and damage during flight.**

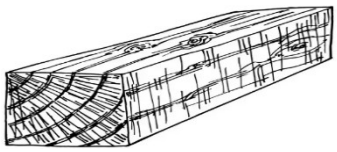

3. **Item 14 c: DUNNAGE** (3 pieces per pallet or ISU). Ensure proper dunnage, three pieces, 4” X 4” X 88”, accompany the pallet during shipment. Shippers providing Wood Packaging Material (WPM) will ensure that any packing material that consists/made of wood (to include, but not limited to, dunnage, pallets, boxes, cleats, crates, and frames) meet the phytol sanitary (e.g., rules governing plants, seeds) requirements outlined in DOD 4140.65-M, Issue, Use, and Disposal of Wood Packaging Material.

Helicopters (flyaway) (Block 15).

15. HELICOPTERS *(Flyaway)*												
a. Fuel Quantity *(As Required)*												
b. Configuration *(T.O./Cert Letter)*												
c. Battery *(Disconnected, Covered/Taped)*												
d. Special Loading Equipment *(Tow bars, etc.)*												
e. Accompanying Load *(w/in Rated Capacity and Secured)*												

1. **Item 15 a: FUEL QUANTITY (Gallons).** Fuel quantities cannot exceed three-fourths (3/4) full or 150-gallons per tank, whichever is less.

2. **Item 15 b: CONFIGURATION (applicable TO or ATTLA certification).** Check applicable directives to ensure the helicopter is configured correctly to fit aircraft contour without contact with sidewalls, ceiling, or floor.
3. **Item 15 c: BATTERY.** Must be disconnected and taped. Ensure the user disconnects and tapes

battery terminals and secures the battery to prevent damage and/or short circuits.

4. **Item 15 d: SPECIAL LOADING EQUIPMENT.** Ensure special equipment necessary to load this cargo is available (i.e., Tow bars, tools, jacks, pintle hooks, pumps, ramps).

5. **Item 15 e: ACCOMPANYING LOAD.** Ensure all secondary cargo (consider all locally manufactured modifications as secondary cargo) is adequately secured within the helicopter. Cargo must meet the same restraint criteria required for the helicopter. Use a minimum of one-half (1/2)-inch diameter rope (not nylon) or approved cargo restraint systems to secure cargo. I. Deploying Force Representative and Mobility Force Inspector.

DEPLOYING FORCE REPRESENTATIVE (Block 16)

The legibly printed name, rank, and signature are required. **To be signed by the deploying force representative accompanying the mobility force inspector.** *The deploying force representative certifies that all items, including hazardous materials, have been declared, adequately prepared, and presented for airlift IAW under applicable directives*. WARNING: Shipping organizations failing to declare and identify hazardous cargo may be subject to disciplinary action under the UCMJ and/or civil penalties outlined in CFR 49 Part 107 Subpart D.

MOBILITY FORCE INSPECTOR (Block 17) *Printed name, rank, and signature are required.* **To**

I certify the above declared items have been inspected and properly prepared for airlift in accordance with all applicable directives.
17. MOBILITY FORCE INSPECTOR *(Print Name/Rank/Signature)*

be completed by the mobility force inspector accomplishing the JI. *The mobility force inspector certifies that all declared items have been inspected and adequately prepared for airlift IAW applicable directives.*

I certify that all items, including hazards, have been declared, properly prepared, and presented for airlift in accordance with all applicable directives.
16. DEPLOYING FORCE REPRESENTATIVE *(Print Name/Rank/Signature)*

JOINT AIRLIFT INSPECTION RECORD/CHECKLIST

(Reference DTR Part III Appendix O For Form Completion)

Page of Pages

1. DEPLOYING FORCE:	2. DEPARTURE AIRFIELD:	3. DATE:

4. AIRCRAFT TYPE AND MISSION NUMBER:	5. LOAD/CHALK NO.	6. START TIME:	7. COMPLETE TIME:	8. MOBILITY FORCE:

9. CHAPTER 3 MOVEMENT	Yes	No

LEGEND *(Mark blocks after each item as follows)* √ = *Satisfactory* X = *Unsatisfactory* *Circle the " X " for items that have been corrected* *If not applicable, Enter " - " (Dash)*	10. INCREMENT/SERIAL/BUMPER NUMBER AND TYPE/TCN											
11. DOCUMENTATION												
a. Pre-Load Plan												
b. Manifest/ Load List/Packing List												
c. Shippers Declaration for Dangerous Goods (SDDG)												
d. DD Form 1387-2												
e. Military Shipping Label *(2D Bar Code)*												
f. ATTLA Certification *(Reference DTR Part III, App O)*												
12. GENERAL REQUIREMENTS *(Applicable to Blocks 13, 14, 15)*												
a. Clean												
b. Fluid Leaks *(Reference DTR Part III, App O)*												
c. Scale Weight *(GW, Axle Weight, Marked on Both Sides)*												
d. Dimensions *(Fits Aircraft Contour)*												
e. Center of Balance *(Marked on Both Sides)*												
f. Keys/Combinations *(All Locks)*												
g. Shoring *(Floor/Roller Limitations)*												
h. Hazardous Materials Preparation/Packaging												
13. VEHICLES/NON-POWERED EQUIPMENT												
a. Mechanical Condition *(Engine Runs)*												
b. Brakes Operational *(Service/Emergency)*												
c. Battery *(Secured, Terminals Protected, No Leaks)*												
d. Fuel Tank(s), Level, Caps												
e. Jerricans *(Secure, Fuel Level, Seal)*												
(1) DOT 5L *(Metal)* MUST BE EMPTY												
(2) UN Specification *(Plastic)*												
f. Tiedown Points/Clevises *(Serviceable)*												
g. Pintle Hooks *(If Used)*												
h. Vehicle Equipment Secured												
i. Tire Pressure												
j. Accompanying Load *(w/in Rated Capacity and Secured)*												
k. Lox/Nitrogen Cart *(Vent Kit)*												
14. PALLETS/PALLET TRAINS/ISU'S												
a. Serviceable *(Pallet and Tiedown Rings)*												
b. Correctly Built/Items Secured												
c. Dunnage *(3 Pieces Per Pallet or ISU)*												
15. HELICOPTERS *(Flyaway)*												
a. Fuel Quantity *(As Required)*												
b. Configuration *(T.O./Cert Letter)*												
c. Battery *(Disconnected, Covered/Taped)*												
d. Special Loading Equipment *(Tow bars, etc.)*												
e. Accompanying Load *(w/in Rated Capacity and Secured)*												

I certify that all items, including hazards, have been declared, properly prepared, and presented for airlift in accordance with all applicable directives.	I certify the above declared items have been inspected and properly prepared for airlift in accordance with all applicable directives.
16. DEPLOYING FORCE REPRESENTATIVE *(Print Name/Rank/Signature)*	17. MOBILITY FORCE INSPECTOR *(Print Name/Rank/Signature)*

DD FORM 2133, JUN 2013 PREVIOUS EDITION IS OBSOLETE. Adobe Professional X

18. ADDITIONAL INFORMATION

DD FORM 2133 (BACK), JUN 2013

Additional Information (On Back). List and explain any discrepancies found during the inspection and actions taken to correct the problem in detail. Pertinent information regarding the specific item will be listed in this block.

Joint Inspection Homework Assignment

1. The deploying unit is responsible for the preparation of cargo, including _____, _____, _____, _____and the preparation of all _____ (to include HAZMAT certification) prior to inspection and aircraft loading.

2. Prior to aircraft loading, a _____ will be performed by a qualified _____ inspector (e.g., Contingency Response Element (CRE)/Cargo Deployment Function (CDF), aerial port, Arrival/Departure Airfield Control Group) along with a representative from the _____ force.

3. _____ Drops or more per minute from a cooling system, crankcase, or gear case is a leak. _____or _____system leaks, no matter how minor, will prevent air shipment.

4. Who must sign Block 16 and 17 of the DD form 2133?

5. What dimensions and how many pieces of dunnage must be included with a 463L pallet or ISU 90? Who is responsible for providing dunnage?

6. What does an X, circle around X, Check Mark, - “Dash” on the DD form 2133 indicate?

7. The Deploying Unit has “sight sensitive” cargo, and the mobility inspector cannot view it. Who gave the deploying unit approval?

Shoring

The objective of this lesson is for each student to comprehend the concept of shoring.

Test Objectives: Distinguish between the different types of shoring

Describe each of the four categories of shoring

Explain the reason for selecting the appropriate type of shoring for any cargo offered for shipment

References: DOD 4500.9-R Part III, Mobility, Defense Transportation Regulation (DTR)

Shoring

General:

The deploying unit is responsible for providing shoring. *Shoring protects the aircraft cargo floor and 463L pallet surfaces. It decreases the approach angle of the aircraft cargo ramps, protects aircraft parking ramps, and increases cargo contact areas for better load distribution.* This chapter explains the different types, usage, and applications of shoring. Comply with ATTLA Certification guidelines and/or contact your affiliated AMCU if you are unsure about shoring requirements.

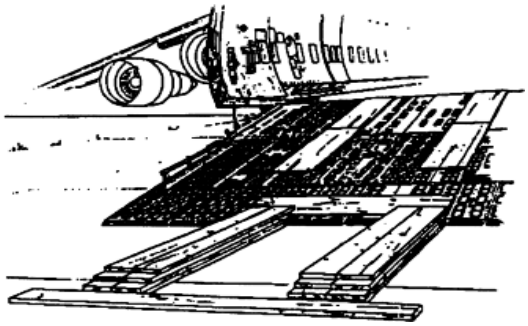

Load spreading

It is a physical process that distributes a concentrated weight over a larger area. This weight exerts a certain amount of pressure determined by its supporting contact area. By using shoring, *the contact area can be increased at a 45-degree angle from the upper surface of the shoring to the cargo floor.* This increased contact area decreases the pressure on the floor, allowing us to carry an otherwise prohibited piece of cargo. It is important to note that shoring will only increase the area of contact by an amount approximately equal to the shoring thickness on all sides of the object it supports. **It will not increase the pounds per square inch (PSI) limitations.**

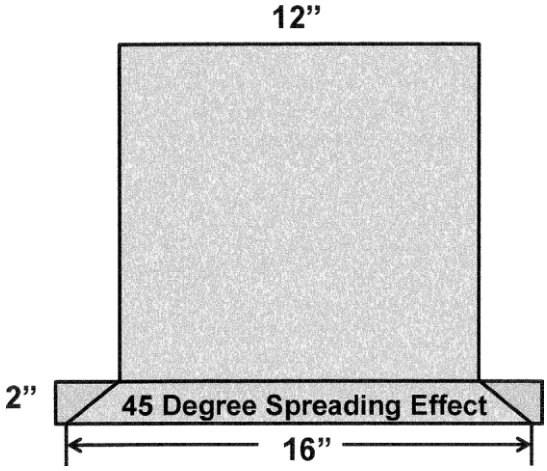

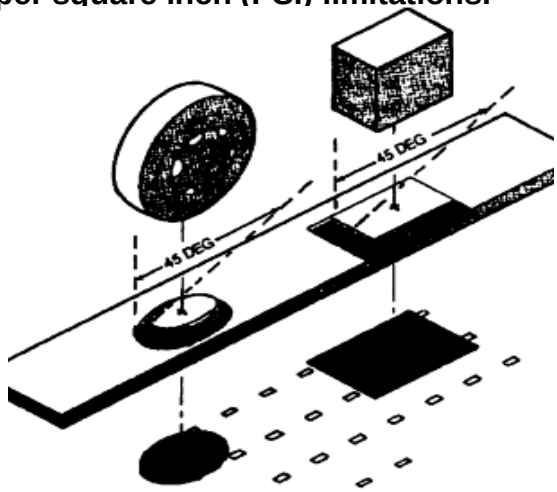

EXAMPLE: A piece of two-inch thick shoring increases the area of contact by two inches on all sides of the item resting on it, not to exceed the dimension of the shoring. The spreading effect of shoring remains the same regardless of the shape of the supported item.

Due to the restrictions within forward and aft aircraft ladder areas, AVOID loading vehicles under aircraft ladders.

Shoring Types

There are four categories of shoring. Each category has its own specifications, requirements, and applications and will be discussed separately.

Rolling Shoring

Use rolling shoring to protect the aircraft parking ramp and the cargo floor and loading ramps of cargo aircraft from damage when transporting vehicles across it. *Most vehicles shipped by air do not exceed weight limitations and consequently do not require rolling shoring.* **Vehicles with cleats, studs, or other gripping devices and treads that allow concentrated contact require rolling shoring.** Cleated or lugged wheels can easily cause damage to the aircraft floor or soft surfaces. The vehicle's total weight is transferred to the small, concentrated contact area of the cleats or lugs. Vehicles with concentrated contacts require thick rolling shoring to prevent damage to the cargo floor, with *a minimum thickness of ¾ inch.*

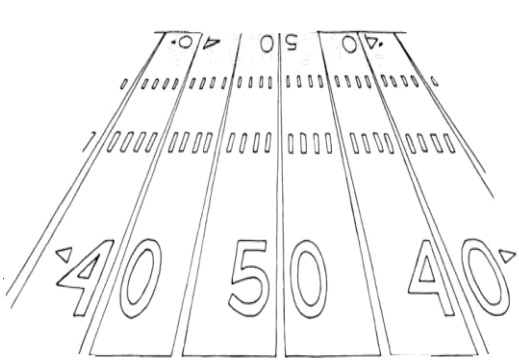

Parking Shoring

Use parking shoring to protect the aircraft floor from damage during flight. **Any vehicle requiring rolling shoring also requires parking shoring.** Each aircraft has specific floor weight limitations that apply to wheeled and non-wheeled items of cargo. If the vehicle exceeds these weight limitations, you must provide parking shoring before the item can be transported by air.
Some general considerations regarding parking shoring you may want to remember when planning an airlift movement:

1. The minimum thickness of parking shoring is ¾ inch.

2. *Use parking shoring to protect the aircraft floor or ramps from contact, such as blades, buckets, fork-lift tines, steel wheels, trailer tongue supports,* etc. **All trailers with a tongue that could rest on the aircraft floor must be shipped with parking shoring, whether connected to or disconnected from its prime mover**.

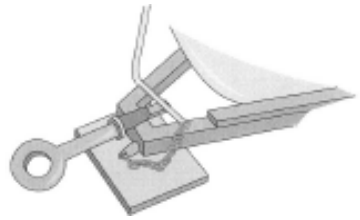

Parking Shoring for Trailer Tongue

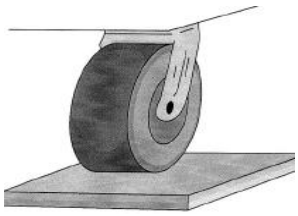

Parking Shoring for Hard/Caster Wheel (plastic, rubber, or steel

3. *Most pneumatic tires do not usually require parking shoring*. The ones that do are generally narrow and/or very heavy.

4. Always use parking shoring when rolling shoring is used.

5. Always use parking shoring on 463L pallets when you load items that have sharp edges or protrusions that could damage the pallet's aluminum surface.

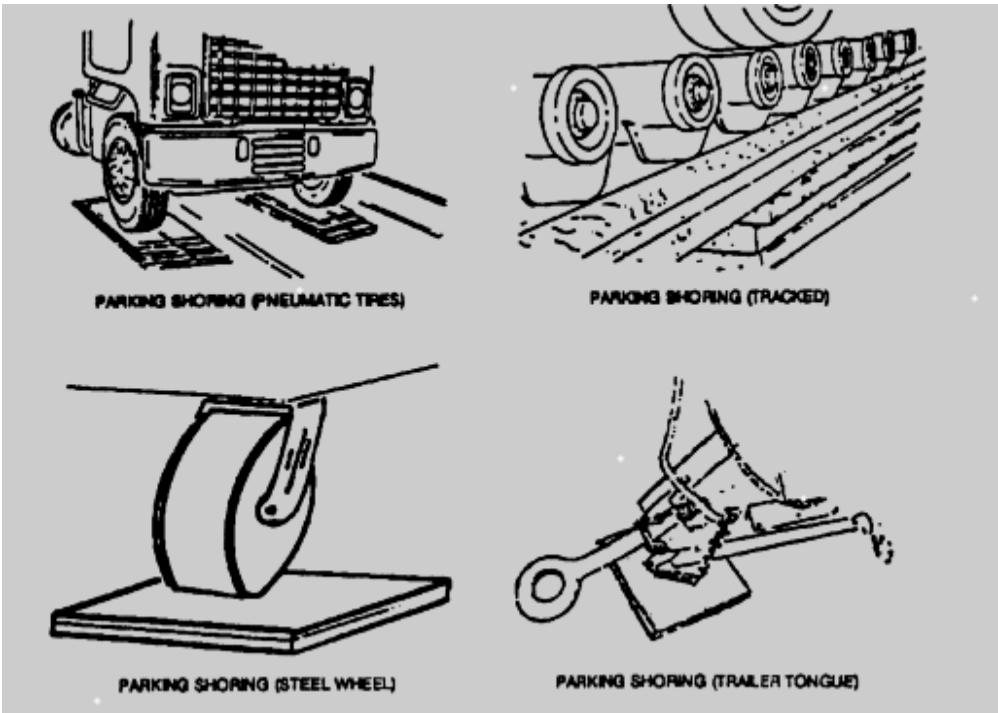

Note: Contact your affiliated AMCU if you are unsure about shoring requirements

Sleeper Shoring

Use sleeper shoring to prevent vertical movement of a vehicle when its tires or suspension system cannot withstand G-loads without failure or when depression would produce slack in the tie-down devices. *Use under the frame or axles of vehicles that weigh over 20,000 pounds and are equipped with soft, low pressure, balloon-type, off-road tires (ATTLA letter will let you know if shoring is required)*. **Sleeper shoring prevents the vehicle from bouncing up and down and possibly pulling the tie-down rings out of the aircraft floor.** The base of the sleeper shoring (area contacting the aircraft floor) must be large enough to support the vehicle's entire weight beneath without exceeding the P.S.I. limitation of the aircraft floor.

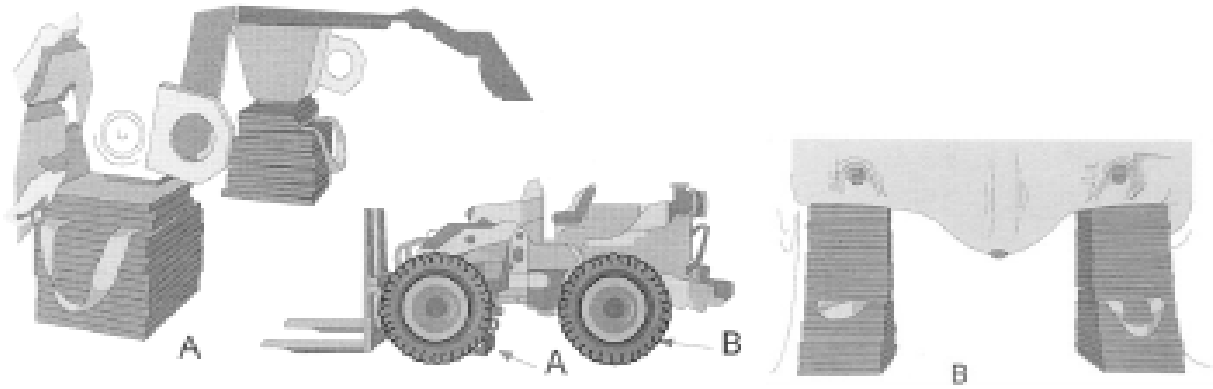

Figure A&B Sleeper Shoring

P.S.I limitations vary depending on the aircraft type and location within that aircraft. Contact your affiliated AMCU for specific guidance if constructing prefabricated shoring.

Approach Shoring

Use approach shoring to *decrease the approach angle of aircraft loading ramps*. Some **cargo items will strike the aircraft or ground during loading/offloading operations**. Extremely tall and long items may also contact the top of the aircraft cargo compartment without a reduced approach angle provided by approach shoring. However, there is no standard method for the user to calculate when and how much approach shoring to use; most helicopters, 40K loaders, and many long vehicles with limited ground clearance will require approach shoring.

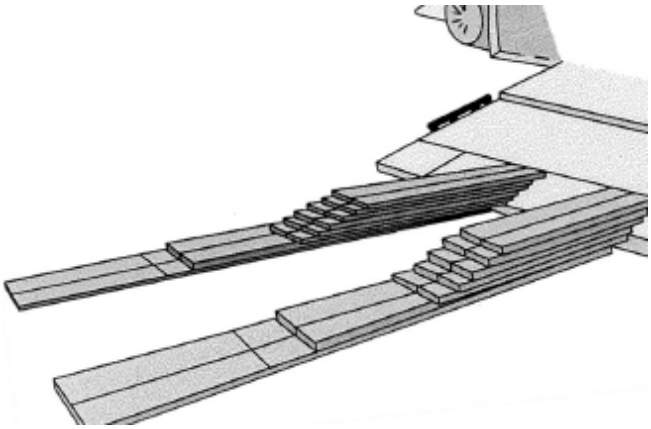

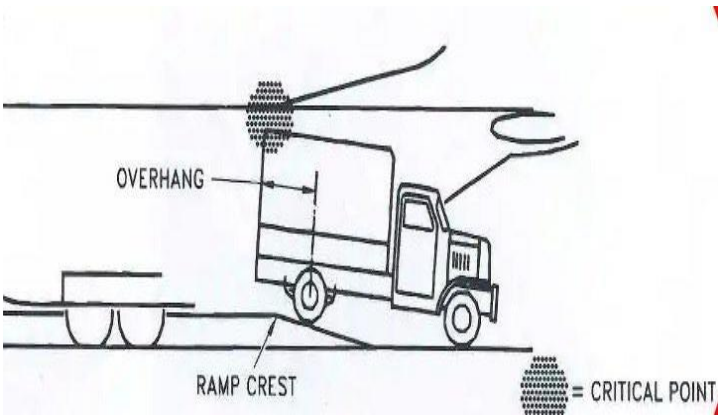

Shoring Homework Assignment

1. _____ is responsible for providing shoring.

2. Name four kinds of shoring.

3. What does shoring increase?

4. Use rolling shoring to protect the aircraft _____, and the _____and loading ramps of cargo aircraft from damage when transporting a vehicle across it.

5. Use _____ shoring to protect the aircraft floor from damage during flight.

6. What kind of shoring will you use to protect the surface of a 463L pallet?

7. Use sleeper shoring under the frame or axles of vehicles that weigh over _____ pounds and are equipped with _____balloon-type, off road tires.

8. Use _____ shoring to decrease the approach angle of aircraft _____. This is because some items of cargo will _____ the aircraft or ground during loading/offloading operations.

9. When using _____shoring you must use _____shoring.

10. What is load spreading?

Unit Documentation

The objective of this lesson is for each student to comprehend unit move documentation responsibility.

Test Objectives:

Identify aircraft package requirements

Interpret the attributes of a transportation control number (TCN)

Describe appropriate clearance data and advanced submission data

Identify hazardous materials and special permits

Define and familiarize the overview of A2I

References:

DOD 4500.9-R Part I, 'Passenger Movement' -- Defense Transportation Regulation (DTR)

DOD 4500.9-R Part II, 'Cargo' -- Defense Transportation Regulation (DTR)

DOD 4500.9-R Part Ill, 'Mobility' -- Defense Transportation Regulation (DTR) APPENDIX H UNIT MOVE DOCUMENTATION

Package Submission

Each aircraft and mission consists of unique characteristics. Cargo may include pallets, rolling stock, or a mixture of both. These cargo pieces may also contain hazardous materials. Passengers may be carrying hazardous materials as well. With that said, all passengers and cargo must be documented correctly. These documents make up the aircraft package.

Documents Required for A/C Package

- **Passenger Manifest DD Form 2131**

Passenger manifesting systems and procedures must facilitate compliance with 49 U.S.C., § 41113, Plans to Address Needs of Families of Passengers Involved in Aircraft Accidents (also known as the Aviation Disaster Family Assistance Act of 1996) by requiring the collection of identifying and emergency contact information called for in 14 Code of Federal Regulations (CFR), Part 243, Passenger Manifest Information.

a. These requirements apply to all systems and procedures used to manifest military and civilian passengers traveling:

(1) On all civil aircraft chartered by or on behalf of the DOD to provide passenger transportation, when the DOD is responsible for manifesting passengers.

(2) On DoD aircraft operated in standard user airlift service (e.g., the airlift provided on a common service basis for all DoD agencies and as authorized for other agencies of the Defense Transportation Regulation – Part I 5 April 2022 Passenger Movement I-103-23 U.S. Government). Aircraft under this definition include AMC organic aircraft, OSA aircraft, theater assigned organic airlift, and other Service-owned aircraft when operated in a common user role.

(3) On any DoD aircraft, when one or more passengers are civilians (including DoD and non-DoD civilian employees, couriers, travelers on public affairs events, dependents, contractors, and retirees) who are not part of the crew or on board the aircraft for operational support purposes. This includes Noncombatant Evacuation Operations.

PASSENGER MANIFEST

1. MISSION NO./CALL SIGN	2. AIRCRAFT TYPE *(Tail Number)*/VEHICLE/VESSEL	3. POE	4. POD	5. DEPARTURE DATE *(YYYYMMDD)*	6. TIME *(ZULU)*

PASSENGER INFORMATION							BAGGAGE				EMERGENCY CONTACT INFORMATION	
7.a. NAME *(Last, First, Middle)*	b. RANK	c. DoD ID	d. STATUS	e. ULN	f. LINE NO.	g. SVC	h. CHECKED PIECES	h. CHECKED WEIGHT	i. CARRY-ON WEIGHT	j. PAX WEIGHT	k. NAME *(Last, First, Middle)*	l. TELEPHONE *(Include area code)*

8. MANIFEST TOTAL	a. ACTIVE	b. DEPENDENT	c. RETIREE	d. CIVILIAN	e. GUARD/RES	f. BAG/PCS	g. CHECKED BAG WT	h. CARRY-ON BAG WT	i. PAX WT	9. TOTAL WEIGHT PAX AND ALL BAGGAGE
						0	0	0	0	0

10. I certify that no unauthorized weapons/ammunition/explosive devices, or other prohibited items are in the possession of those personnel from whom I am the designated manifesting representative or troop commander, and that their authorized weapons have been cleared.

a. DATE *(YYYYMMDD)*	b. PRINTED NAME *(Last, First, Middle Initial)*	c. GRADE	d. SIGNATURE

DD FORM 2131, AUG 2019 PREVIOUS EDITION IS OBSOLETE. Reset Page 1 of 2

• **Cargo Manifest DD Form 1385**

Automated or on a DD Form 1385, Cargo Manifest is used to verify cargo delivery, support billing for services, and justify claims resulting from cargo discrepancies. Manifest documents are unclassified except when the sponsoring Defense Transportation Regulation – Part II 8 March 2021 Cargo Movement II-203-34 Service indicates a need for security classification. Process classified manifests IAW DoDM 5200.01, DoD Information Security Program.

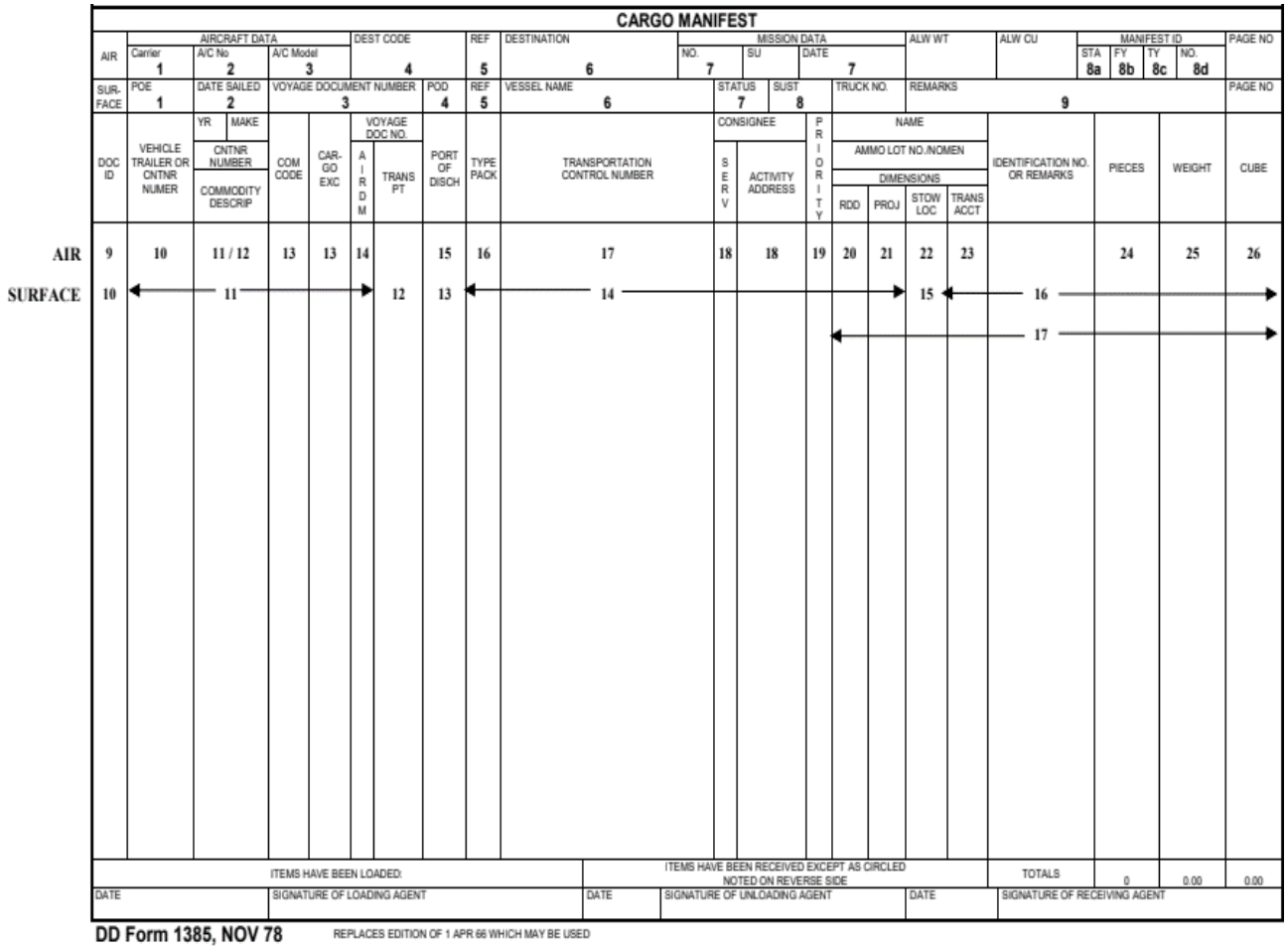

Figure 203-5. DD Form 1385, Cargo Manifest

• **Load plan**

The Integrated Computerized Deployment System (ICODES) is the only acceptable automated system for completing air load plans. If ICODES is unavailable, units will utilize reach back to obtain an ICODES generated load plan. If a manual load plan is required, use DD Form 2130 or Air Force (AF) Form 4080, Load/Sequence Breakdown Worksheet.

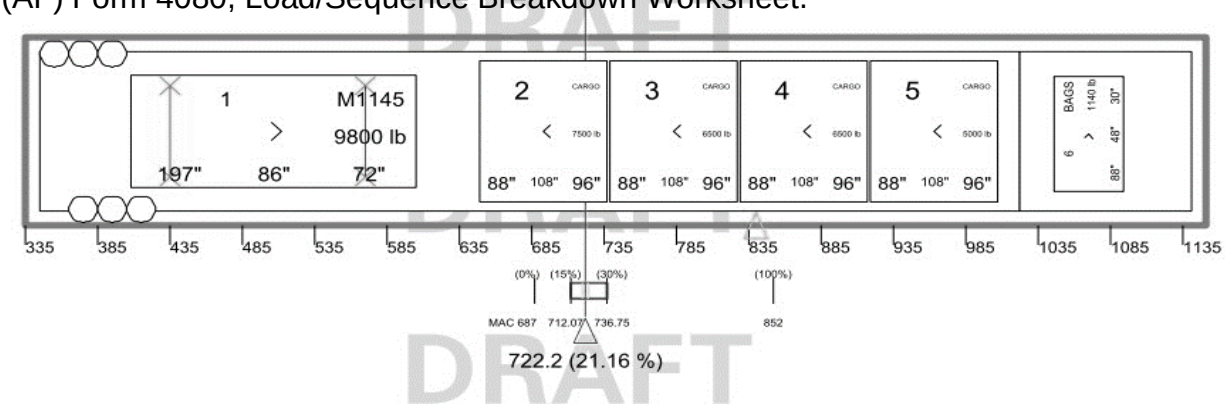

DRAFT

• **ATTLA (if required)**

Vehicles and equipment having characteristics presenting air movement transportability problems as identified in Department of Defense Instruction 4540.07, Operation of the DoD Engineering for Transportability and Deployability Program, must be approved by the Air Transportability Test Loading Activity (ATTLA) at ATTLA@us.af.mil or be listed in an aircraft weapon system Dash 9 technical order.

Internal Air Transport Certification

AFLCMC/EZFC (ATTLA)
2145 Monahan Way
WPAFB, OH 45433-7017
https://intelshare.intelink.gov/sites/attla/

Date: 12 June 2019
Item Nomenclature: Caterpillar Model 452-0820 10K All-Terrain Fork Lift (ATFL)
File Number: 2013.12.16.01 Rev 3
Requestor: On File
Superseded Certification Date: 13 October 2017

New Information Summary: Clarified requirements for C-130, C-17 and C-5 transport.

• **Shipper's Declaration for Hazardous Goods (HAZDEC)**

The deploying unit is responsible for the certification of ammunition, explosives, and other HAZMAT for movement on DoD-owned and -controlled airlift by (IAW) Air Force Manual (AFMAN) 24-604 (Interservice), Preparing Hazardous Materials for Military Air Shipments (http://www.e-publishing.af.mil; select "Departmental," "24-Transportation", and "AFMAN 24-604"), The Shipper's Declaration for Dangerous Goods, is used to certify shipments. AFMAN 24-604 has current step-by-step instructions for completing the Shipper's Declaration for Dangerous Goods.

SHIPPER'S DECLARATION FOR DANGEROUS GOODS

SHIPPER
Traffic Management Flight
5236 Chase St
Wright-Patterson AFB, OH 45433-5501

PHONE NUMBER:
(937) 257-4409 DSN: 797-4409

AIR WAYBILL NO.

PAGE 1 OF 1 PAGES

SHIPPER'S REFERENCE NUMBER
TCN: FB2300618090001XXX

CONSIGNEE
FB 5612
435 ABW LRS
Ramstein AB, Germany

COMPLETED AND SIGNED COPIES OF THIS DECLARATION MUST BE HANDED TO THE OPERATOR

WARNING
Failure to comply in all respects with applicable Hazardous Materials/Dangerous Goods Regulations may be in breach of the applicable law, subject to legal penalties

TRANSPORTATION DETAILS

THIS SHIPMENT IS WITHIN THE LIMITATIONS PRESCRIBED FOR: (DELETE NON-APPLICABLE)

PASSENGER AND CARGO AIRCRAFT | ~~XXXXXXXXXCRAFT~~ ~~SNKXXXXXX~~

AIRPORT OF DEPARTURE:
DOV
Dover AFB, DE

AIRPORT OF DESTINATION:
Ramstein AB, Germany

SHIPMENT TYPE: (DELETE NON-APPLICABLE)

NON-RADIOACTIVE | ~~XXXXXXXXXE~~

NATURE AND QUALITY OF DANGEROUS GOODS

DANGEROUS GOODS IDENTIFICATION				QUANTITY AND TYPE of PACKING	PACKING INST	AUTHORIZATION
UN or ID NO.	PROPER SHIPPING NAME	CLASS or DIVISION (SUBSIDIARY RISK)	PACKING GROUP			
UN3528	ENGINE, INTERNAL COMBUSTION, FLAMMABLE LIQUID POWERED	3		1 DIESEL GENERATOR	A7.11	

Transportation Control Number (TCN)/DTR, Part II, Appendix L

A TCN is a 17-character number assigned to control and manage every piece of cargo throughout the transportation pipeline. Each TCN is unique. TCN's are not duplicated. Information regarding TCN's can be found in the Defense Transportation Regulation (DTR), Part II, and Appendix.

- Position 1 – Service code: **A**=Army, **F**=Air Force, **N**=Navy, **M**=Marine Corps
- Positions 2-8: Use **ULN**. The army uses **UIC**. **"$"** for unused spaces
- Positions 9-10: Use "**00**". Small units (under 20k) use "**CH.**"
- Positions 11-14: Shipment, increment, or serial number.
- Position 15: Always use "**0.**"
- Positions 16-17: Type of shipment– Complete=" **XX,"** Partial=" **AX**, **BX**…" Split=" **XA**, **XB**…."

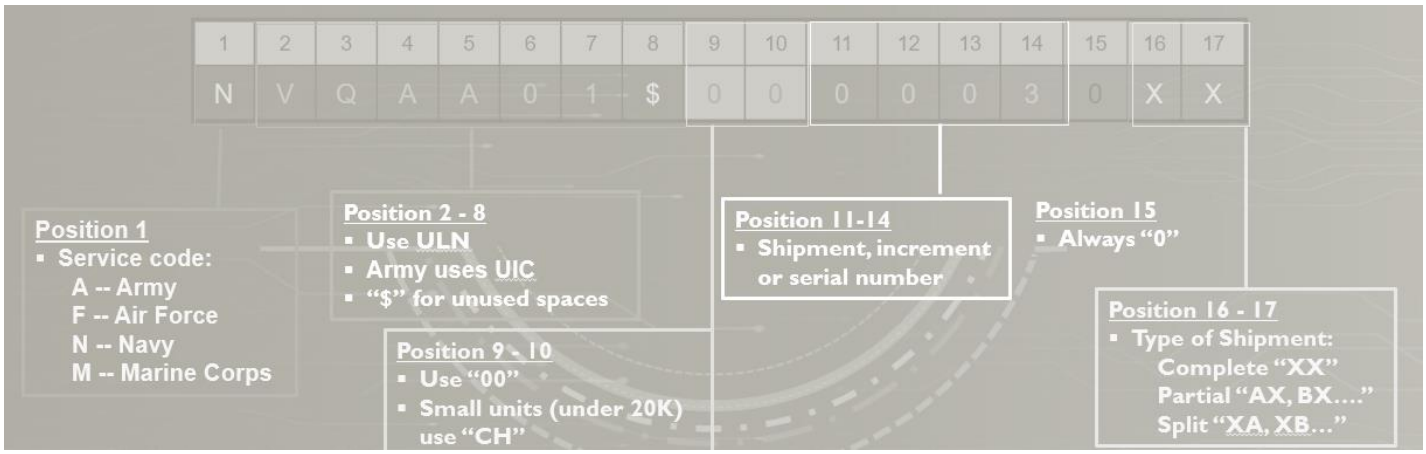

DTR Part III – Mobility (Appendix H)

This regulation establishes criteria for passenger, cargo, and mobility movements. It provides policy for procedures and guidance for:

• This appendix applies to the cargo belonging to deploying units on Military Sealift Command (MSC) arranged ships moving through common user ocean terminals or via Air Mobility Command (AMC) airlift or commercial carrier under Military Surface Deployment and Distribution Command (SDDC) liner and door-to-door contract arrangements.

• Transportation data for unit cargo movement during contingencies and classified mobilization exercises afford the maximum protection possible within the limitations and constraints of existing systems. Since data processing in the Defense Transportation System (DTS) is unclassified, classified data requires handling and processing separate from other movement data.

• When available, clearance and advance movement data updates required by this appendix may be accomplished through the Service's automated deployment system.

Clearance Data and Advanced Data Submission

Advance Data

The deploying unit will provide advance data before actual movement to the POE begins for clearance of cargo and equipment.

This procedure allows proper cargo routing to be determined and provides for coordinated movement of material into the transshipment facilities.

Units must be familiar with the movement information necessary to support these routing and clearance procedures, including Joint Operation Planning and Executing System (JOPES)

Movement Data

Movement data, including routing requests, are typically prepared as far in advance as possible and maintained by the shipper. (For Army and Air Force, this is generally the Transportation Officer (TO).

Shipper Submission

The shipper submits the advance movement data to the clearance authority unless prior arrangements have been made to provide automated movement requirements through a Service System.

Assistance

All information is in the DTR. In addition, you can reach out to 621 MSOS for EAGLE advisors. They can help on all matters related to this process.

Phone: 609-754-2710 0730-1630 EST. or email 621MSOS.Eagle.Ops@us.af.mil

Hazardous Materials Special Permits (SP's)

Transportation

All hazardous material transportation must comply with Service regulations and the regulations discussed in the DTR during unit moves.

Sponsoring Services

The CDR, SDDC, in conjunction with the CDR, MSC, is the authorized representative of the sponsoring Services in obtaining new or modified SP's. In an emergency, the sponsoring Services may make direct contact with the DOT to obtain an SP. SDDC Operations, 1 Soldier Way, Building 1900 West, Scott AFB, IL 62225, is to be promptly notified of each emergency action. Units may obtain specific information on SP's from DTR Part II, Cargo Movement, Chapter 204, Table 204-1, and the following:

- U.S. Army – SDDC Operations (see Paragraph N.2)

- U.S. Air Force – HQ AFMC/A4RT

- U.S. Navy – Refer to NAVSEA SWO-20-AC-SAF-010/020/030, Transportation and Storage Data for Ammunition, Explosives, and Related Hazardous Materials

- U.S. Marine Corps – Refer to NAVSEA SWO-20-AC-SAF-010/020/030, Transportation and Storage Data for Ammunition, Explosives, and Related Hazardous Materials.

- **Hazardous Diplomatic Clearance Worksheet (HAZDIP).** The HAZDIP is used to identify hazardous material to mission planning personnel for clearance purposes. These personnel work closely with the US State Department to arrange per- mission for the hazardous cargo to transit other countries en-route to its destination. A HAZDIP is required for **each** aircraft load plan (chalk), identifying all hazards and needs to include: •Proper Shipping Name (PSN) - Combine all like PSNs/UNs on one line

• United Nations Number (UN) - Combine all like PSNs/UNs on one line

• Number of pieces

• Weight in pounds for each line item (Exception: use kilograms for N.E.W.)

• Net Explosive Weight (N.E.W.) for explosives only in kilograms

• Hazard class

• Use International Civil Aviation Organization (ICAO) 4 letter IDs

• APOE/APOD of strategic validation not necessarily the originating or final Destination

For Official Use Only

Originating Mission Number:
Aircraft Call Sign:
Unit:
POC NAME:
POC DSN PHONE:
POC EMAIL:
Comments:

HAZARDOUS CARGO AIRCRAFT CLEARANCE REQUEST

Proper Shipping Name	Description/TCN/NSN	UN #	See NOTE 1 Pieces or Packages	Weight in Pounds	See NOTE 3 Weight in Kilograms	N.E.W. in Kilograms	Class and Div	See NOTE 2 Onload ICAO	See NOTE 2 Offload ICAO

A2I Verification Process (To Request Contingency Airlift)

CREATING AN A2I ACCOUNT ON TACC WEBSITE

Create an account at

https://tacc.us.af.mil/

The Requestor is the person who is submitting airlift documentation.

The Requestor submits account request through the TACC website. This generates an email to the requestor-selected supervisor. That supervisor must verify the requestor's Information Assurance CBT, then an account is automatically created.

Do not copy and paste your email in your request (type them both).

DOCUMENTATION SUBMISSION IN A2I

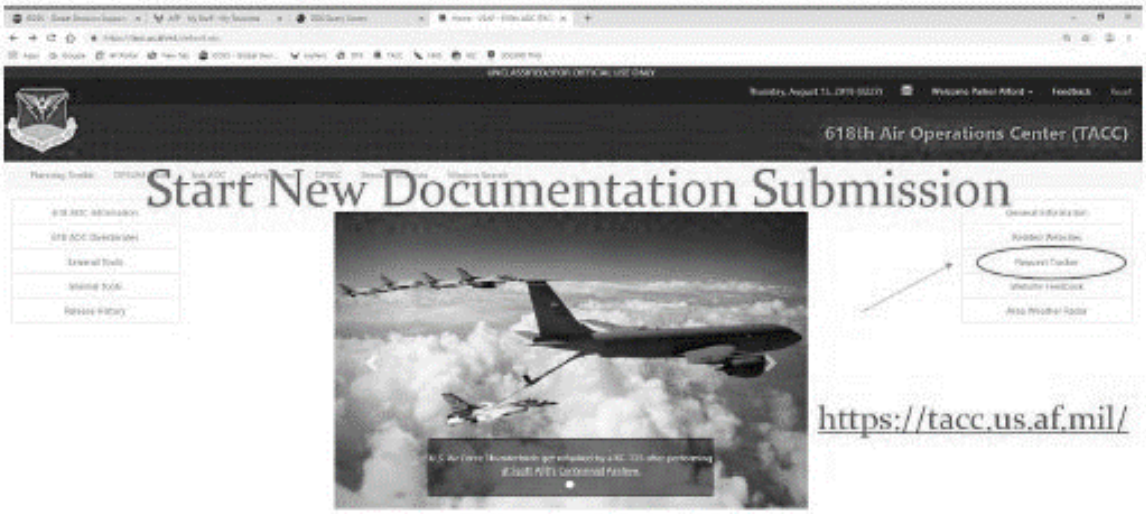

Air Transportability Training Loading Activity

The objective of this lesson is for each student to comprehend ATTLA certification requirements.

Test Objectives:

Identify cargo that requires ATTLA certification

Interpret the content of an ATTLA letter

Explain how to request an ATTLA certification

References:

DOD 4500.9-R Part II, Cargo, Defense Transportation Regulation (DTR)

AFI 24-602 Vol 2, Cargo Movement

MIL-STD-1366, Transportability Criteria

AFI 25-101, *Air Force War Reserve Material (WRM) Program Guidance and Procedures*

ATTLA Responsibilities

ATTLA stands for *Air Transportability Test Loading Activity*. ATTLA is the sole authority for certifying equipment to load on USAF aircraft. *ATTLA assists in ensuring compliance with airlift limitations and procedures.* Users and manufacturers may request ATTLA's assistance in the design and production process of new equipment to ensure that item's ability to be airlifted. A copy of the certification memorandum shall accompany the item when it is presented for load processing.

ATTLA Letter Overview

1. ***Reference Document*** –Provides insight into documents used for initial certification.

2. ***Item Preparation*** – Cargo may need to be prepared for loading. Specific preparation procedures are identified in the ATTLA Letter.

3. ***Loading Instructions*** – ATTLA provides specific loading procedures for common and unique cargo.

4. ***Restraint Requirements*** – Tie-down requirements are annotated on the ATTLA certification.

5. ***Required Distribution*** – The ATTLA required distribution section lists the agencies requiring a certification copy.

ATTLA Letter Requirements

An ATTLA Letter is required if any of the following statements are true:

- Exceed TO 1C-XXX-9 (Dash -9) loading limits
- Special loading procedure not listed in Dash -9
- Items designed to interfere with an aircraft rail system (i.e., LSA Adapters)
- Enclosed items not designed with pressure relief valves
- Items with questionable structural integrity
- Items with significant damage to the frame or structural components
- Items that cannot be restrained using standard restraint procedures listed in aircrafts Dash -9
- Items that operate in flight

"What determines an ATTLA is required?"

- A length greater than 20 feet
- Height or Width is greater than 8 feet
- Weight is greater than 10,000 lbs.
- Floor contact pressure is more than 50 psi
- Axle loads greater than 5,000 lbs.
- Wheel loads greater than 2,500 lbs.
- Cargo that exceeds weight limits stated in a certification letter
- Unfamiliar items designed to be loaded into the aircraft rail system
- Items that require special equipment or procedures for loading and/or securing for flight

Shipper's Responsibility

Based on the criteria previously listed, the shipper must identify which pieces of cargo will require an ATTLA certification letter.

Obtain and provide current ATTLA Certification Letters during loading.

Shippers, including air load planners, must maintain an active account for viewing/verifying ATTLA Certification letters.

https://intelshare.intelink.gov/sites/attla/

If cargo exceeds parameters or has not been certified for airlift, the designated unit representative must request ATTLA certification for that item before airlifting.

Requesting Certification:

- Requests can be sent from the design of the item up to the airlift of the item.
- Certification will only happen after the completion of construction.
- It typically takes 60-90 days after all data is submitted.
- Cargo is broken down into three different categories for certification; each type has a different certifying path.
- ATTLA will provide a listing of all required measurements.

Load Planning & Aircraft Weight Balance

The objective of this lesson is for each student to comprehend the load planning process.

Test Objectives:

Explain terms associated with aircraft weight and balance

Describe the two theories associated with weight and balance

Describe the five steps of load planning

References:

DOD 4500.9-R, Part II, Cargo Movement, Defense Transportation Regulation (DTR)

DOD 4500.9-R, Part III, Mobility, Defense Transportation Regulation (DTR)

T.O. 1C-130A-9, Cargo Loading Manual

T.O. 1C-130J-9, Cargo Loading Manual

T.O. 1C-5A-9, Loading Instructions

T.O. 1C-17A-9, Technical Manual Cargo Loading Instructions

General

Load planning determines the number and type of aircraft required to transport your unit's cargo in advance.

Terminology. The following terms are used extensively in load planning to distinguish the type of movement:

INTER-Theater: Refers to movement between theaters of operation or between CONUS and a theater of operation. (CONUS to CENTCOM AOR)

INTRA-Theater: Refers to movement inside a theater of operation.
Kuwait to Iraq - inside CENTCOM AOR)

Cargo Characteristics

Bulk cargo: Includes items that will fit on a 463L pallet, i.e., 104 inches by 84 inches by 96 inches.

Oversize cargo: Includes air cargo exceeding the usable dimension of a 463L pallet. This cargo is air transportable on the C-5, C-17, C-130, and most civilian contract cargo carriers.

Outsize cargo: Cargo that exceeds the dimensions of oversized cargo and requires the use of a C-5 or C-17 aircraft or surface transportation.

Airlift Planner Responsibilities.

The primary responsibility of the load planner is to ensure the **safe and efficient** use of the aircraft. The load planner must comply with:

- Aircraft safety and floor load restrictions.
- The load must be within the center of the balance range for takeoff, flight, and landing.
- Ease of on load and ease of offload. Vehicles are generally backed into C-130 and C-17 aircraft.
- Movement priority of cargo.
- Emergency Jettisoning must be considered. Pallets must always go behind vehicles unless prior coordination is accomplished.
- Hazardous cargo considerations. Cryogenic cargo that requires venting must be placed near an aircraft cryogenic vent. The hazardous cargo must be accessible, segregated if required, etc.
- Passengers will not be seated closer than 30 inches forward of netted or strapped cargo. Passengers will not be seated aft of pallets unless prior coordination is accomplished.
- A baggage pallet will be built for 20 or more passengers.

Movement Planning Phases. Additional information is located in 4500.9 DTR Part III, Chapter 303. Movement/Deployment Planning has two phases;

1) Planning/Preparation

During Planning/Preparation, the unit identifies equipment and troops to be airlifted and how many of each type of aircraft they will need. Preplanned load plans will be accomplished during the planning and preparation phase.

2) Execution

During Execution, load planners will complete the final load plan. The final load plans may differ from the preplanned ones due to a change in unit movement priorities, an aircraft scheduling change, or equipment breakage in the marshaling yard.

User Role in Movement.

When your unit is tasked, the requirements for that tasking are contained in the Time Phase Force Deployment Data (TPFDD). *The TPFDD is a database used to coordinate the movement of forces into their operational locations. It contains information specifically identifying your unit's personnel and equipment requirements for the mission and information regarding when & how your unit will deploy & re-turn.* Your unit is identified with a unique Requirement Identification (REQID) number in this database. The REQID may also be known as a Unit Line Number (ULN) or Force Requirement Number (FRN). **Your data from the TPFDD, identified by the REQID (UNL or FRN), is required for you to know the "Who/What/When/Where" to complete aircraft load plans.** Your unit movement personnel should be familiar with this data and provide it as required. Once you know the equipment & personnel needed, you will typically create aircraft load plans using the information provided in this course. Additionally, you will complete a Hazardous Cargo Aircraft Clearance Worksheet, also known as a HAZDIP. The HAZDIP is used to identify the primary hazard class of cargo you will be transporting for planning purposes. This information is used by mission planners and US State Department personnel to obtain diplomatic clearance for your cargo to transit to other countries en-route to or from your deployed location.

5 STEPS OF LOAD PLANNING

1. **Identify Equipment/Personnel for Airlift**
2. **Reference ATTLA Certs for applicable equipment**
3. **Place equipment on aircraft(s)**
4. **Adhere to aircraft limitations**
5. **Optimize Aircraft CG**

Load planning. After identifying the cargo and personnel to be airlifted and movement priorities have been established, complete the load planning forms for the appropriate type of aircraft. This will typically be accomplished utilizing ICODES.

ICODES Load plan. The ICODES load plan is the standard for all DOD cargo movement. Individual air-craft load plans are completed during the initial Movement Planning Phase using planning data. Before the movement, this data is replaced with actual information to include specific aircraft to be utilized, cargo & passenger weights, and any other updated information needed to produce the final aircraft load plan. The following list is not all-inclusive but contains emphasized items that should be included on load plans.

A. Departure/Destination airfields. Use International Civil Aviation Organization (ICAO) 4 letter ID. (Example: Ft. Campbell Army Airfield = KHOP)

B. Chalk Number. It is used to identify cargo designated for a particular aircraft.

C. Transportation Control Number (TCN). The 17-digit ID number for each cargo line item.

D. The Hazard Class for each cargo item on the load plan.

E. Unit Line Number (ULN). The associated ULN for all cargo and passengers manifested on the aircraft.

F. Ensure AFMAN 24-604 Chapter 3 Move is selected if applicable.

G. All mission & aircraft data to include actual operating weight & moment if known.

Example ICODES Load Plan

5th SFG Deployment File
20120923 19:41 UTC

Aircraft type/Config:	C-17/STD-AL	**Mission type:**	Mobility
Delivery method:	AL	**Mission #:**	1st QTR JCET
Unit Being Airlifted:	4/5, 2/5	**Aircraft Tail #:**	
Type movement plan:	JCET 06,31	**System chalk #:**	14
Departure date & time:	20120830 12:28 UTC	**AFMAN 24-204 Chapter 3 Move**	
Departure airfield :	KHOP		
Destination airfield:	OJAM		
Load Description:	Request 2-Stop offload. First Stop at Marka, Jordan. Second Stop in Kuwait. ULNs associated with this load: U5J01JW, U5J02JW, U5K01JW, U5K02JW.		

MAIN DECK

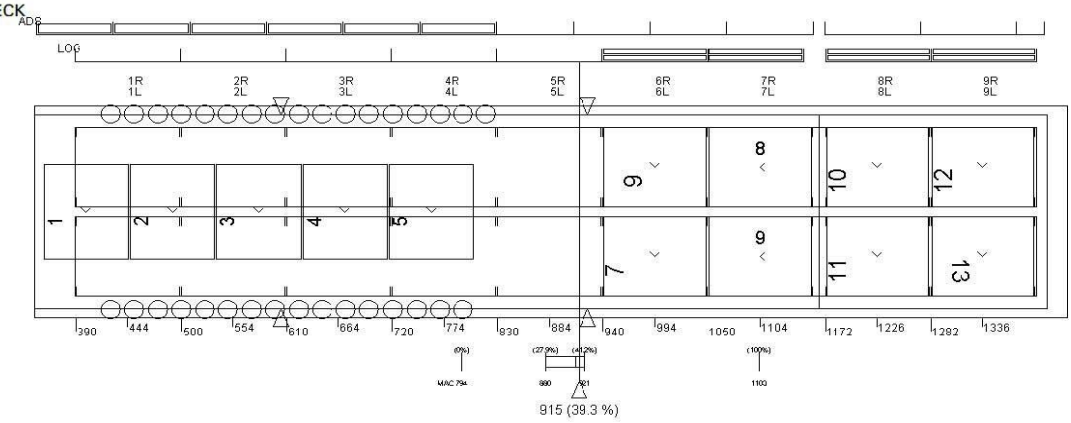

FOR OFFICIAL USE ONLY

SQ/D	TCN/Pallet ID	Bumper	Model/Nomenclature	LEN	WDT	HT	WT	FSN	TSN	CB	HZ	FL	V	D	SH	CCC
1/M	AWH05C2$0F03100XX		ISU-90 BUE/ISU-90 BUE	108	88	90	7000	357	445	401	N		N	A		J3D
2/M	AWH05C2$0F03000XX		ISU-90 BUE/ISU-90 BUE	108	88	90	7000	447	535	491	N		N	A		J3D
3/M	AWJQ3B0$0F03600XX		ISU-90/ISU90 BUE	108	88	90	6000	537	625	581	N		N	A		J3D
4/M	AWJQ3B0$0F03500XX		463L BUE/463L BUE	108	88	62	5000	627	715	671	Y		N	A		J3D
5/M	AWJQ3B0$0F03500XX		463L Zodiacs/463L Zodiacs	108	88	62	5000	717	805	761	Y		N	A		J3D
6/M	AWJQ3B0$0F03500XX		463L AMMO/463L AMMO	88	108	62	7000	940	1048	994	Y		N	A		J3D
7/M	AWH05C2$0F03200XX		463L AMMO/463L AMMO	88	108	62	4000	940	1048	994	N		N	A		J3D
8/M	AWJQ3B0$0F03200XX		ISU-90 BUE/ISU-90 BUE	108	88	90	7000	1050	1158	1104	N		N	A		J3D
9/M	AWJQ3B0$0F03500XX		ISU-90 BUE/ISU-90 BUE	108	88	90	7000	1050	1158	1104	N		N	A		J3D
10/M	AWJQ3B0$0F03300XX		463L AMMO/463L AMMO	88	108	62	8000	1172	1280	1226	Y		N	A		J3D
11/M	AWJQ3B0$0F03100XX		463L BUE/463L BUE	88	108	62	7000	1172	1280	1226	N		N	A		J3D
12/M	AWJQ3B0$0F03000XX		463L AMMO/463L AMMO	88	108	62	8000	1282	1390	1336	Y		N	A		J3D
13/M	AWJQ3B0$0F03400XX		463L BUE/463L BUE	88	108	62	7000	1282	1390	1336	Y		N	A		J3D

Total # of Pax:	33	Weight/Pax:	210	Total PAX Weight:	6930
Total # of Subfloors:	0	Weight/Subfloor:	0	Total Subfloor Weight:	0
Total Cargo Wt:	85000	%ACL:	102	ACL:	90000
Cargo/Mail Weight:	85000	Cargo/Mail Moment:	8598		
Operating Weight:	284945	Operating Moment:	25891		
Zero Fuel Weight:	376875	Zero Fuel Moment:	34489		
CG Station:	915	%MAC:	39.3		

SQ/D	Flags/Warnings
- / -	Total load weight, 91930 lb, is greater than the planning ACL, 90000 lb.
4/M	Hazard Violation due to incompatible items or an item containing incompatible hazards. This can occur when an association is created between incompatible items or incompatible multiple hazards are added to an item.
4/M	These items are incompatible in their current configurations. This problem could be a result of being stowed using Breakbulk by Cube or their placement within a breakbulk group shell. This can also occur when an association is created between incompatible items or incompatible multiple hazards are added to an item.
5/M	These items are incompatible in their current configurations. This problem could be a result of being stowed using Breakbulk by Cube or their placement within a breakbulk group shell. This can also occur when an association is created between incompatible items or incompatible multiple hazards are added to an item.
10/M	The two items may be carried in the same compartment or hold but must have a minimum separation of 88 inches (2.2 meters) in all directions.
12/M	These items are incompatible in their current configurations. This problem could be a result of being stowed using Breakbulk by Cube or their placement within a breakbulk group shell. This can also occur when an association is created between incompatible items or incompatible multiple hazards are added

FOR OFFICIAL USE ONLY

Load plan Distribution. *Seven copies of aircraft load plans are required and will be distributed to the following*:

- Departure airfield mobility force
- Departure Airfield Operations
- Loading team chief
- Aircraft Loadmaster or Boom Operator Arrival airfield mobility force
- Plane load/troop commander Arrival Airfield Operations

Additional copies may be required for customs and foreign clearances on missions outside the United States. Allow one extra copy per en-route station. For country-specific information, consult the DoD Foreign Clearance Guide, which may be found at https://www.fcg.pentagon.mil/fcg.cfm.

AIRCRAFT WEIGHT AND BALANCE

General

As more units move by air, having fully qualified airlift planners becomes essential. Basic working knowledge of aircraft weight and balance is vital to the planner. Without this knowledge, flight safety is jeopardized, and any further airlift planning is meaningless. This portion explains the basic principle and concepts necessary for the accurate determination of aircraft weight and balance.

Aircraft Center of Gravity (CG)

CG is the point where the aircraft balances. Aircraft flight performance depends on the proper location of this point. If the center of gravity is not within the allowable range, the aircraft will not fly properly. Additionally, as fuel, oil, cargo, and other weights are added, burned off, or relocated within the aircraft, the CG will change. The aircraft design permits such changes, provided the CG location remains within certain specified limits. An empty aircraft is always in balance, regardless of the fuel on board. When adding a cargo load, weight and balance become a concern. Each aircraft has a specified forward, and aft limitation that must not be exceeded to ensure the aircraft is safely balanced for flight. These limits vary according to the gross weight of the aircraft. The only way to assure a safely balanced aircraft is to know how to find the CB of a load and determine if it will fall in the proper location on the aircraft.

CB Terms

Reference Datum Line (RDL). A line at or near the aircraft's nose. All longitudinal distances are measured from the RDL.

Fuselage Station (FS). Fuselage stations are measurements in inches from the RDL to that specific point in the aircraft. A number on the wall of an aircraft identifies these stations. For example, fuselage station 520 (FS 520) in the aircraft is a point 520 inches aft of the RDL. Use these measurements or distances to determine the aircraft's cargo location and compute the aircraft's center of balance.

Moment (M) Amount of force exerted at a particular point on the Aircraft, often referred to as inch-pounds. Obtain a moment by multiplying the distance (inches from the RDL) by the weight (pounds).

Center of balance (CB) The point at which items balance. This point is measured in *inches* from the *RDL*.

Gross weight (GW) The total weight of all cargo, troops, and baggage.

Allowable Cabin Load (ACL) The maximum planning weight of cargo that may be transported by a specific aircraft. ACL is limited by several factors: aircraft type, planned flight route and distance, fuel load, weather, airfield location, and runway characteristics.

Mean Aerodynamic Chord. (MAC) It is an engineering term representing an airfoil chord in aircraft design. It is a constant length, which is also used to calculate CG location in terms of percent MAC.

Percent MAC (% MAC) Percent MAC expresses a location as a percentage of the Mean Aerodynamic Chord (MAC).

Zero Fuel Weight Center of Gravity (ZFW CG) The location where a loaded aircraft is balanced (excluding fuel) is typically expressed in % of MAC. It includes the aircraft's weight with all equipment, crew, passengers, and cargo but does not include usable fuel. Load planners must ensure the ZFW CG is within allowable range as determined by aircraft flight manuals.

Weight and Balance Airlift users are responsible for efficiently planning their cargo loads before aircraft arrival. This means effectively utilizing the ACL in cargo space while balancing the load within the specific aircraft center of balance range. This theory is based upon the aircraft's center of balance. The simplest way to explain this is to look at two children of the same weight playing on a seesaw. If both children are the same distance from the center of the board, on opposite sides, the board will be balanced. To balance the board, if the children's weights are different, the children must be placed at different distances from the center of the board to allow it to balance.

By moving cargo about the aircraft, we can adjust the center of gravity of the aircraft. The load planner's job is to make sure the load center of balance is within the aircraft center of gravity range. To determine the center of the gravity range, add the total cargo and passenger weights for each aircraft load. Enter the "Cabin Load" and track down the column vertically until you reach the range that your weight falls within. Follow the line horizontally until you are in the vertical column for your aircraft type. The two numbers represent the CG range. Your load center of the balance must be between these two numbers.

Weight Characteristics of Aircraft Allowable Cabin Load (ACL) is the weight of cargo, baggage, and passengers that may be transported by a specific aircraft. ACL is limited by several factors such as distance, route to be flown, fuel load, weather, and airfield characteristics. Personnel who prepare load plans must be familiar with the weight limitations of available airlift aircraft and ACL. Accurate ACL information can be derived only from known operating conditions and is usually established at the planning conference or the mission execution time. Your affiliated AMCU can provide you with a specific ACL. Airlift personnel compute ACLs and give this information to unit load planners for each operation. However, load planning often needs to be accomplished before the actual mission ACL is known.

DOD 4500.9-R Part III, Mobility, Defense Transportation Regulation, provides planning ACL's. Use the following figures:

- C-130E/H/J(S) 25,000 pounds
- C-130J-30 40,000 pounds

- C-5A/B 130,000 pounds
- C-5M 150,000 pounds
- C-17 130,000 pounds

Aircraft Characteristics When planning to move by air, you must know the physical characteristics of airlift aircraft and your cargo. You must know the size of the cargo door and its location, the size of the cargo compartment, and the location, number, and type of troop seats. You must know the aircraft's optimum center of balance and available loading aids (such as ramps, winches, and 463L equipment). Some of these aids are built into the aircraft, mobility forces provide some, and the unit to be airlifted must give some. Also, if assigned, the Air Mobility Liaison Officer (AMLO) can be of some assistance.

Weight and Balance Theories "Pyramid Loading" and the "50-50" methods are two standard weight and balance theories.

Pyramid Loading Method Place the heaviest cargo item over the optimum load center of balance. Lighter items are placed in front of and in the back of the heaviest item. The heaviest items should be placed close to the optimum center of balance to reduce stress on the airframe.

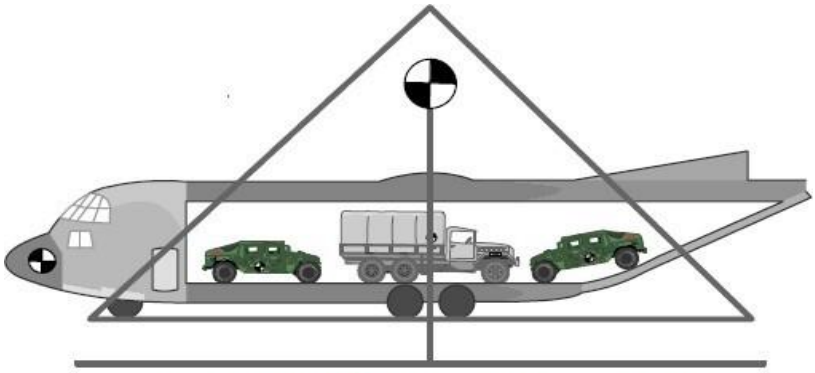

Pyramid Loading Method

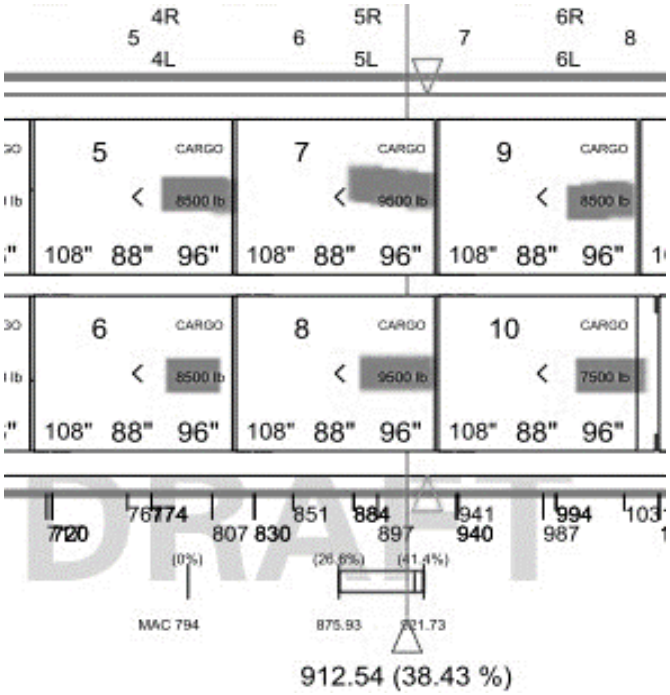

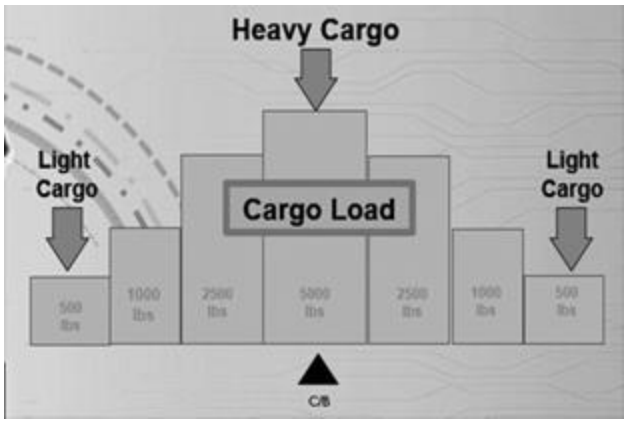

50-50 Loading Method Look at two children playing on a seesaw. To make it work, they adjust the balance of the board by moving their weight to different distances from the balance point (fulcrum). The same basic principle applies to aircraft weight and balance. By moving cargo about the aircraft fulcrum, we can adjust the balance of an aircraft. 50-50 Method. 50% of the cargo is placed on either side of the optimum cargo load center of balance.

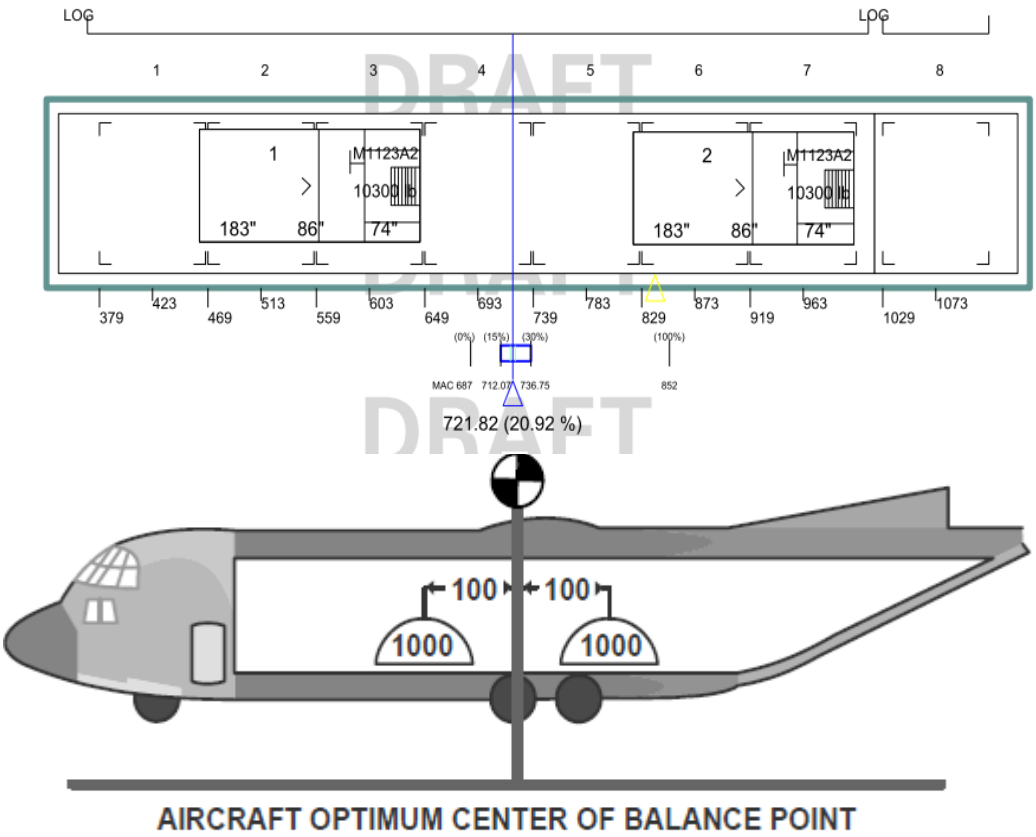

AIRCRAFT OPTIMUM CENTER OF BALANCE POINT

50-50 Loading Method

Load Planning Theories. There are three fundamental theories to understand during load planning which include

Adding Cargo, Removing Cargo, and **Shifting Cargo**.

When adding cargo, the CG moves toward the added weight. When cargo is removed, the CG moves away from the removed weight. When shifting cargo, the CG moves in the same direction as the shifted cargo.

C-130H/J Characteristics

The objective of this lesson is for each student to comprehend C-130H/J load planning characteristics.

Test Objectives:

Give examples of weight, pallet, vehicle, and passenger considerations when preparing to load plan a C-130H/J aircraft.

Summarize the roles and missions of the C-130H/J aircraft.

Explain the treadway considerations for a C-130H/J aircraft.

Describe the different configurations of the C-130H/J aircraft.

Demonstrate C-130H/J load planning computations using ICODES

References:

DOD 4500.9-R Part III, 'Mobility' –Defense Transportation Regulation (DTR)

1C-130A-9, Cargo Loading Manual

1C-130J-9, Cargo Loading Manual

AFI 11-2C-130 Volume 3, Addenda A, C-130 Operations Configurations Missions Planning

AFI 11-2C-130J Volume 3, Addenda A, C-130 Operations Configurations Mission Planning

AMCI 24-605, Volume 2

Web Pages: https://www.transcom.mil/dtr/part-iii/

The C-130J Hercules

The C-130 Hercules, designed and built by the Lockheed Corp, has a primary intra-theater (tactical) airlift mission. It provides airdrop and air-land support to forward operating locations. Typical C-130 use would include moving cargo from main theater staging bases (positioned from the United States by larger airlift airplanes or ships) to front line areas.

C-130 Aircraft

C-130J Dimensional Planning Factors. The cargo compartment is 672 inches long, 125 inches wide, and 108 inches high at its lowest point under the wing section. The cargo floor area extends from LS 345 to LS 1017. The cargo ramp is 119.9 inches long and 118.9 inches wide. Under certain circumstances, you may exceed these dimensions, but only after coordination with your affiliated AMCU.

Bending Moments. Due to the added length of the C-130J-30, it has unique limitations regarding weight placement forward and aft of the wing area. The weight placed in these areas exerts a bending force on the aircraft structure measured in units referred to as bending moments. Due to forces encountered in flight, strict adherence to bending moment limitations is necessary to prevent aircraft structural damage. The Aircraft Commander has final authority to accept/reject any or all cargo if the planned load is not within bending moment limits. For more information regarding this limitation, contact your affiliated AMCU.

Bending Moments

Weight/Loading Considerations. Weight is critical to safe aircraft operation. The load planner must adhere to maximum load weight limitations. The Pyramid Loading Method is also essential to avoid violating aircraft structural limitations. The planning Allowable Cabin Load (ACL) is 40,000 pounds. Heavier loads are possible after coordination with your affiliated AMCU and/or mission planning personnel (618 AOC). The cargo compartment has specific weight and height restrictions in different areas. The load planner must consider these limitations when planning cargo placement.

C-130J Planning ACL

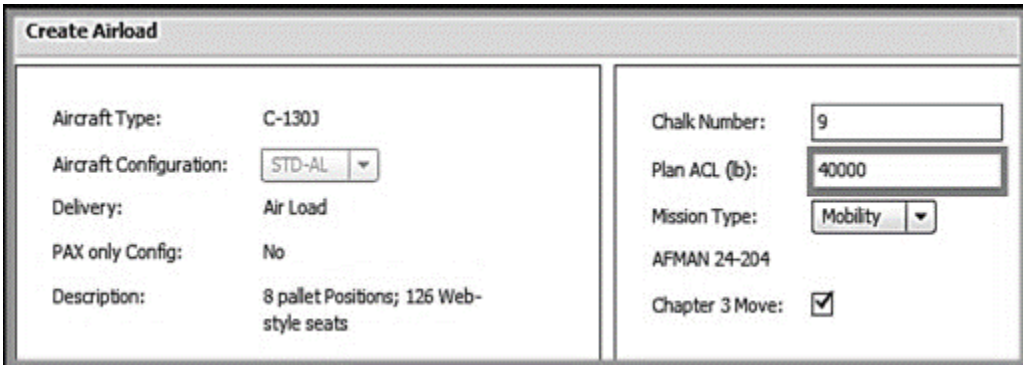

Vehicles/Non-powered AGE Considerations.

Treadway. Two 35-inch wide vehicle treadways extend the cargo floor and ramp length. These treadways begin 15-inches from the aircraft centerline. Allowable axle, wheel, and tongue loads are decreased when placed between the treadways.

Treadway Limits:

<u>From LS 345 - 537</u>
Max Axle 6,000 pounds

<u>From LS 537 - 882</u>
Max Axle 13,000 pounds

<u>From LS 882 - 1017</u>
Max Axle 6,000 pounds

<u>From LS 1017 - 1141 (cargo ramp)</u>
Max Axle 2,500 pounds

Max (single axle) may be increased to 3,500 pounds if it is the only item on the ramp.

Between Treadway Limits:

<u>From LS 345 - 1017 (on the floor)</u>
Max Axle 5,000 pounds
Max Tongue Load 2,000 pounds

<u>From LS 1017 - 1141 (cargo ramp)</u>
Max Axle 1,200 pounds
Max Tongue Load 450 pounds

Wheel weights. Maximum wheel weights are half the maximum axle weight in that area.

Maximum Ramp Weight. The maximum weight planned on the cargo ramp will not exceed 5,000 pounds.

TREADWAY LIMITATIONS

Max Axle Weight

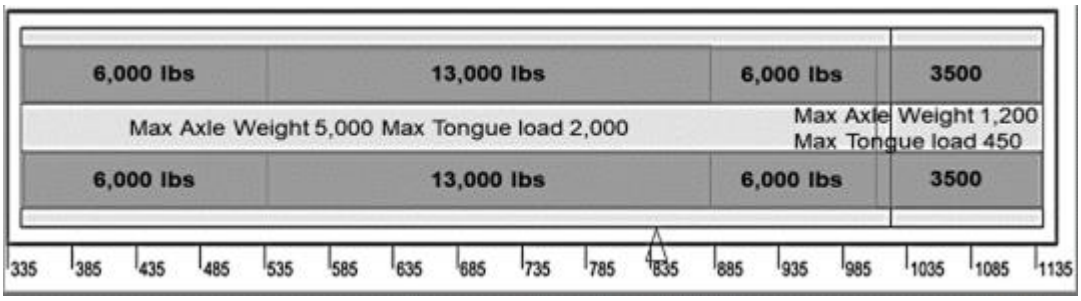

Height restrictions. Vehicles and Non-powered age planned on the cargo floor should be reduced in height to 102 inches. Cargo over 102 inches to 106 inches in height will require special loading procedures. Vehicles over 102 inches should be driven facing forward or may need approach shoring. Contact your affiliated AMCU for guidance. Vehicles placed on the cargo ramp are limited to 80 inches in height.

Pallet Considerations. The C-130J-30 can carry eight 463L pallets, seven on the cargo floor and one on the cargo ramp. Pallet positions are numbered one through eight, beginning at the front of the aircraft. Each pallet position has specific weight and profile restrictions.

Weight Limitations. The maximum gross weight of a pallet placed in positions one through six is 10,355 pounds. Pallet position seven is limited to 8,500 pounds. The maximum gross weight of a pallet placed on the ramp (position eight) is 5,000 pounds.

Pallet Profiles.

Pallet Positions 1 & 2. Cargo may be loaded over the entire usable surface of the pallet up to 76 inches in height. Any cargo above 76 inches up to 96 inches high must be placed 12 inches inboard from the edge of the usable surface of the pallet. Depending on the aircraft model, this restriction could be on either or both sides of the pallet—Max pallet weight not to exceed 10,355 lbs.

PALLET POSITIONS 1 & 2

Any cargo above 76” up to 96” high must be placed 12” inboard from the edge of the usable surface of the pallet.

Note: Contact your AMCU for cargo above 96”

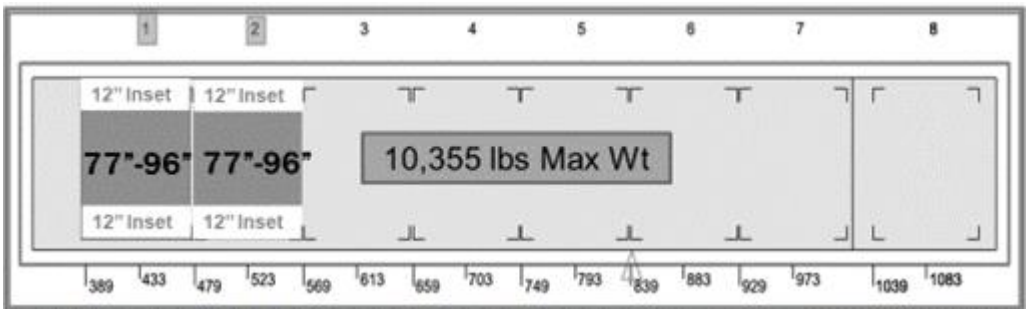

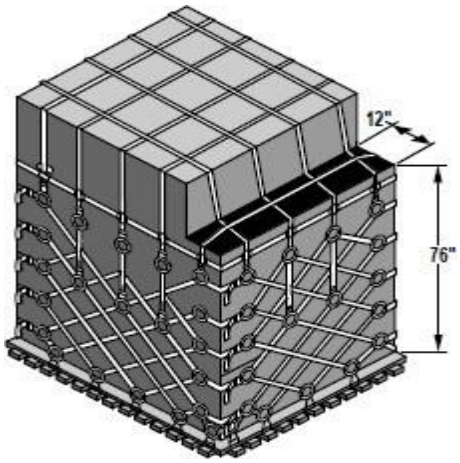

Pallet Profile (Pallet Position 1 & 2)

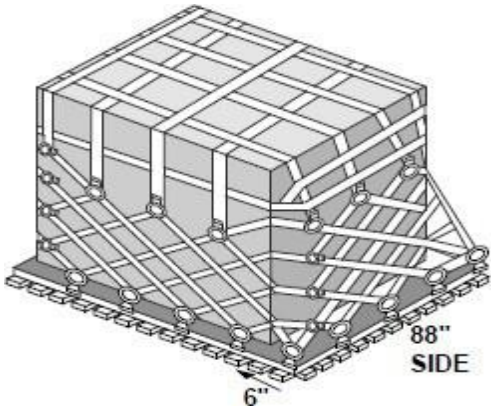

Pallet Profile (Pallet Position 4 & 5)

Pallet Positions 3 & 6. Cargo may be stacked up to 96 inches high. Max pallet weight not to exceed 10,355 lbs.

PALLET POSITIONS 4 & 5

Cargo must be stacked at least 6 inches in from the edge of the usable surface on one 88-inch side.

Note: Contact your AMCU for cargo above 96”

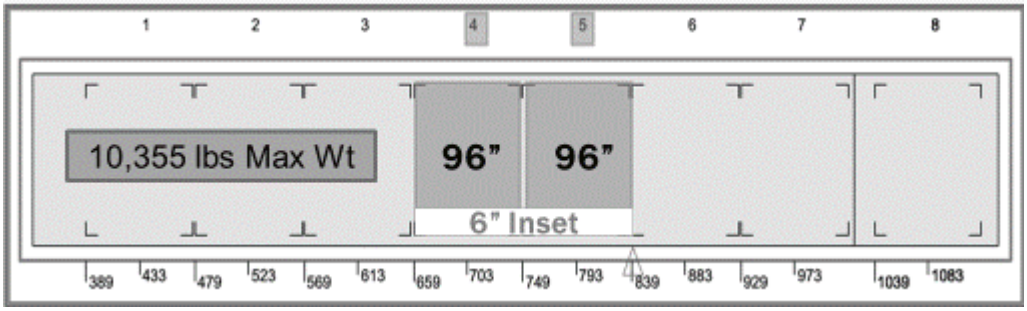

Pallet Positions 4 and 5. Cargo may be stacked up to 96 inches high. Cargo must be stacked at least six inches from the edge of the usable surface on one 88-inch side. This will allow access to the rear of the cargo compartment through the wheel well area. Max pallet weight not to exceed 10,355 lbs.

Pallet Positions 7. Cargo may be loaded over the entire usable surface of the pallet up to 96 inches in height. Pallet position seven is limited to 8,500 lbs.

Ramp Pallet (Position 8). Cargo must be stacked at least 20 inches from the edge of the usable surface on one 88-inch side. This will allow access to the rear emergency exits. Cargo may be stacked up to 77 inches high. Max pallet weight is 5,000 lbs.

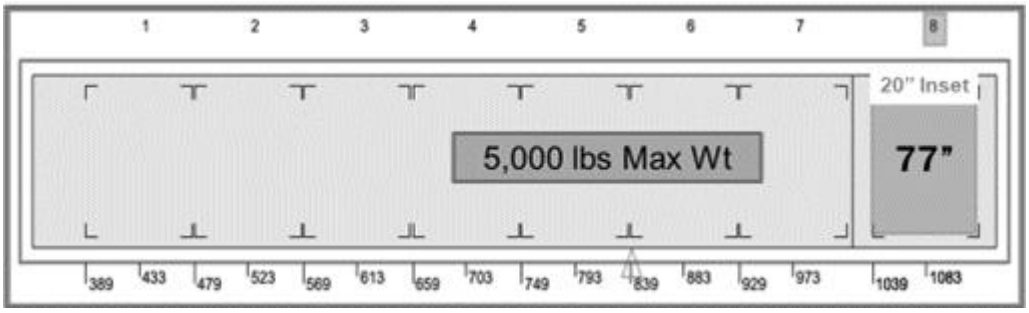

PALLET POSITION 8

Cargo must be stacked at least 20 inches in from the edge of the usable surface on one 88-inch side.

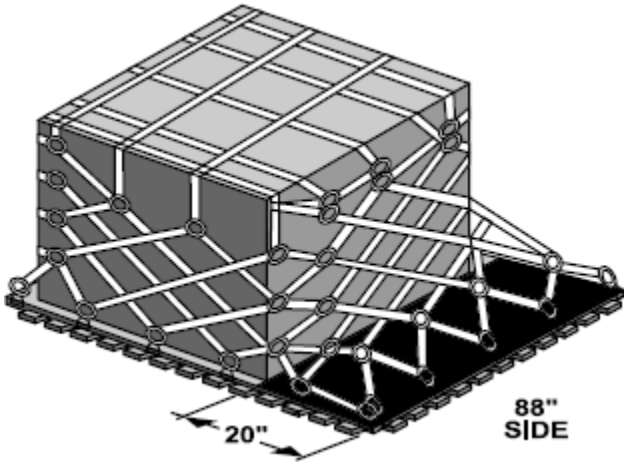

Pallet Profile (Pallet Position 8)

Passenger Considerations. A maximum of 126 passengers can be carried. There are 60 sidewall seats with an optional 66 centerline seats. For prolonged over-water flights, personnel is reduced to 80 (crew included). This is due to the capacity of the lift rafts.

Passenger seating with Palletized Cargo. Passengers will not be seated closer than 30 inches forward or aft of netted or strapped cargo. Passengers cannot be seated beside palletized cargo.

CENTERLINE SEATS

- 128 Total seats (66 optionally installed centerline seats)
- 126 Available for use
- 80 Max personnel for prolonged over-water flight

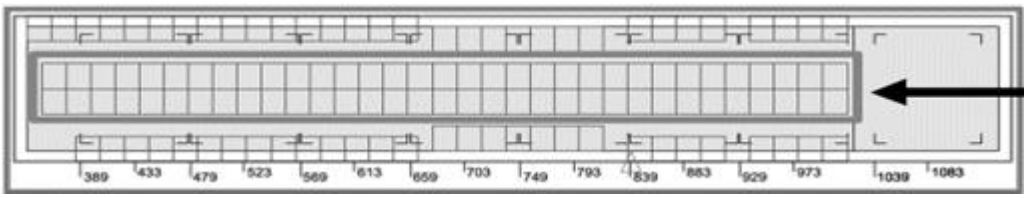

Loadmaster requirements. One loadmaster will always be seated in the cargo compartment when passengers are carried. Two loadmasters are required when more than 40 passengers are carried. The number of seats needed for the loadmasters will reduce passenger seating.

Passenger seating next to Non-palletized Cargo outside the aircraft wheel well area.

Cargo widths 76 inches or less. Centerline cargo and seat passengers on both sides of the cargo compartment.

Cargo widths between 76 inches to 96 inches. Seat passengers only on one side of the cargo compartment. Whenever possible, cargo will be offset to the right, and passengers will be offset to the left.

Cargo widths greater than 96 inches. No passengers besides cargo.

PASSENGERS NEXT TO CARGO

OUTSIDE OF WHEEL WELL AREA

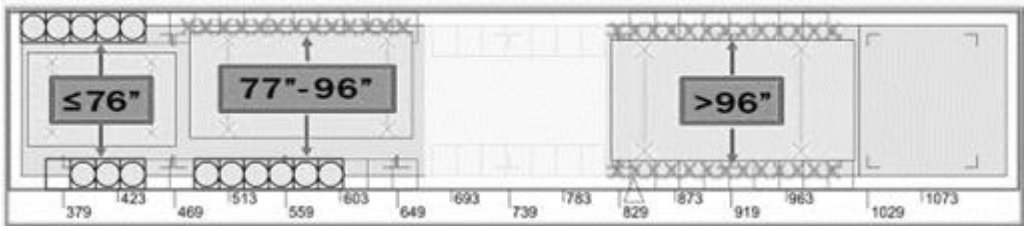

Passenger seating next to Non-palletized Cargo in the aircraft wheel well area.

Cargo widths 52 inches or less. Centerline cargo and seat passengers on both sides of the cargo compartment.

Cargo widths between 52 inches to 72 inches. Offset cargo and seat passengers on opposite sides.

Cargo widths greater than 72 inches. No passengers besides cargo.

PASSENGERS NEXT TO CARGO

INSIDE OF WHEEL WELL AREA

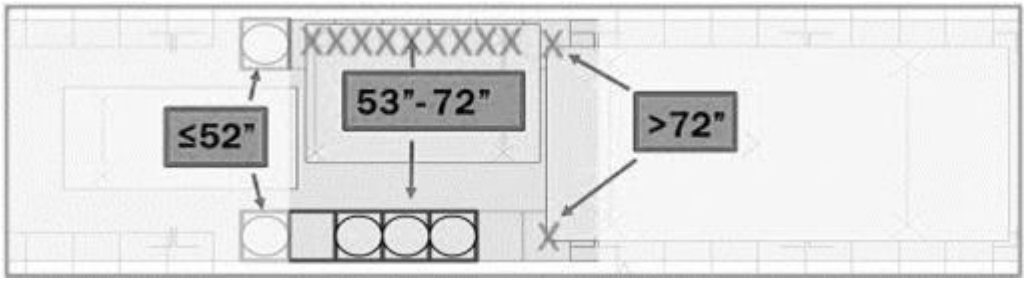

<u>The C-130H Hercules</u>

Dimensional Planning Factors. The size of the C-130 allows operation into airfields that prohibit the use of larger airlift aircraft (runways typically 5,000 ft. or less). The cargo compartment is 624 inches long (612 inches usable), 123 inches wide (105-inch wide usable floor width with dual rails installed), and 108 inches high. The cargo ramp is 127 inches long and 123 inches wide (105- inch wide functional floor width with dual rails installed). This cargo compartment cross-section allows the loading of items with a maximum dimension of 106 inches high and 115 inches wide. Under certain circumstances, you may exceed these dimensions, but only after coordination with your affiliated AMCU.

Differences between C-130H & C-130J. The C-130H has a shorter fuselage, whereas the C-130J has an extended fuselage by two pallet positions. The engine turbine has four blades on the C-130H model, whereas the C-130J has six blades. These are easy identifying indicators between the two models.

Weight/Loading Considerations. The planning Allowable Cabin Load (ACL) is 25,000 pounds. Heavier loads are possible after coordination with your affiliated AMCU and/or mission planning personnel (618 AOC). The cargo compartment has specific weight and height restrictions

in different areas. The load planner must consider these limitations when planning cargo placement.

Vehicles/Non-powered AGE Considerations

No Load Area. No cargo may be planned between Fuselage Station 245 and 257. Installed aircraft systems prevent cargo from being placed in this area. Cargo will not be placed on the ramp hinge.

Treadway. Same as the C-130J model.

Treadway Limits: All restrictions are the same as the C-130J model with different fuselage stations.

TREADWAY LIMITATIONS

SAME RESTRICTIONS (DIFFERENT FS START/STOP)

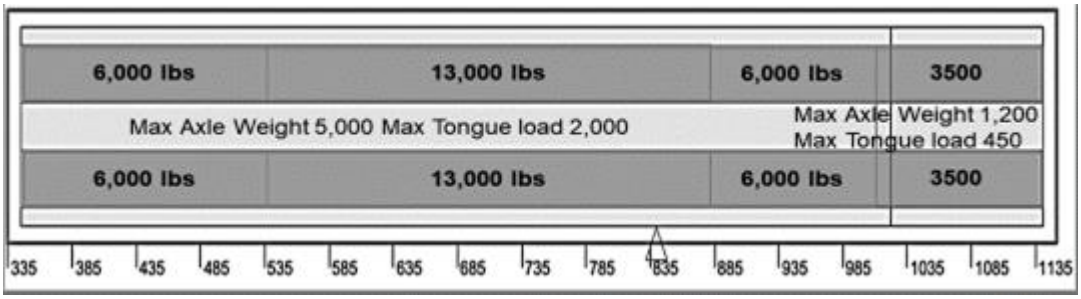

Wheel weights. Maximum wheel weights are half the maximum axle weight in that area.

Maximum Ramp Weight. The maximum weight planned on the cargo ramp will not exceed 4,664 pounds for C-130E/H.

Height restrictions. Same as the C-130J model.

Pallet Considerations. The C-130 can carry six 463L pallets, five on the cargo floor and one on the cargo ramp. Pallet positions are numbered one through six, beginning at the front of the aircraft. Each pallet position has specific weight and profile restrictions.

Weight Limitations. The maximum gross weight of a pallet placed in positions one through four is 10,355 pounds. The maximum gross weight of a pallet placed in position five is 8,500 pounds. The maximum gross weight of a pallet placed on the ramp (position six) is 4,664 pounds on C-130E/H.

Pallet Profiles.

Pallet Position One. Same restriction as Pallet Position 1 & 2 on C-130J model. Cargo may be loaded over the entire usable surface of the pallet up to 76 inches in height. Any cargo above 76 inches up to 96 inches high must be placed 12 inches inboard from the edge of the usable surface of the pallet because of the stowage ranks installed on the aircraft. Maximum weight not to exceed 10,355 lbs. Due to numerous C-130 configurations, contact affiliated AMCU for specific info.

Pallet Position Two. Cargo may be loaded over the entire usable surface of the pallet up to 96 inches high—maximum weight not to exceed 10,355 lbs.

Pallet Position Three and Four. Same restriction as Pallet Position 4 & 5 on C-130J model. Cargo may be stacked up to 96 inches high. Cargo must be stacked at least six inches from the edge of the usable surface on one 88-inch side. This will allow access to the rear of the cargo compartment through the wheel well area. Maximum weight not to exceed 10,355 lbs.

Pallet Position Five. Same restriction as Pallet Position 7 on the C-130J model. Cargo may be loaded over the entire usable surface of the pallet up to 96 inches high—maximum weight not to exceed 8,500 lbs.

Ramp Pallet (Position 6). Cargo must be stacked at least 20 inches from the edge of the usable surface on one 88-inch side. This will allow access to the rear emergency exits. Cargo may be stacked up to 76 inches high. The maximum weight does not exceed 4,664 lbs. for C-130E/H.

PALLET POSITION 6

Cargo must be stacked at least 20 inches in from the edge of the usable surface on one 88-inch side.

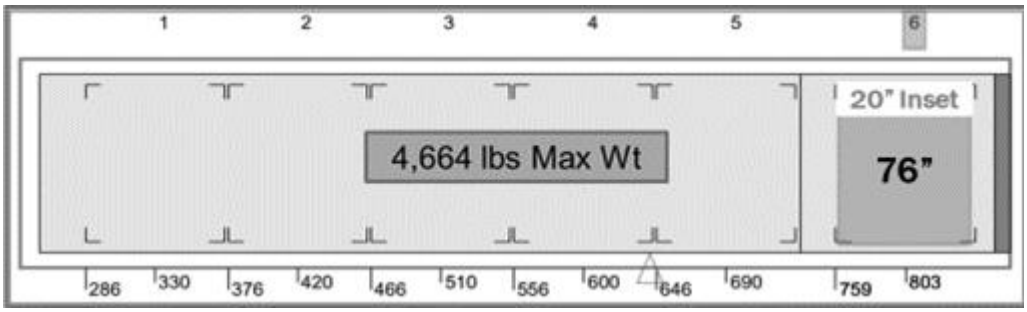

Passenger Considerations. A maximum of 90 passengers can be carried over land. A maximum of 80 passengers can be carried over extended water flights based on life raft availability. There are 44 sidewall seats and an optional 48 centerline seats. Availability is limited to 42 sidewall seats when more than 40 passengers are load planned for the flight.

CENTERLINE SEATS

- 98 Total seats (48 optionally installed centerline seats)
- 90 Available for use
- 80 Max personnel for prolonged over-water flight

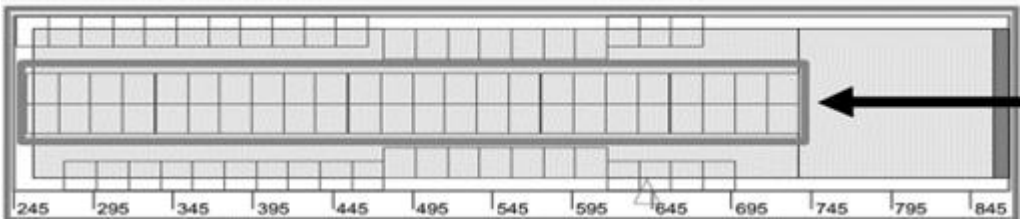

Passenger seating with Palletized Cargo. Passengers will not be seated closer than 30 inches forward or aft of netted or strapped cargo. Passengers cannot be seated beside palletized cargo.

Passenger seating next to Non-palletized Cargo outside the aircraft wheel well area. All passengers next to cargo restrictions are the same as the C-130J model.

Passenger seating next to Non-palletized Cargo in the aircraft wheel well area. All passengers next to cargo restrictions are the same as the C-130J model.

Configurations. Standard cargo compartment configurations ensure that aircraft arrive at the airfield prepared to load the equipment and personnel immediately. The load planner must select the proper configuration code to avoid loading delays. Refer to AFI 11-2C-130 Vol 3 Addenda A and AFI 11-2C-130J V3 Addenda A for detailed configuration information and modifications. **NOTE:** Load planners will typically utilize the Standard Air Land (STD-AL) configuration when creating load plans with ICODES software.

Load Planning Factors. Air Mobility Command (AMC) instituted a fuel efficiency initiative to optimize fuel usage. Mission planners will manage aviation fuel as a limited commodity and precious resource. Fuel optimization will be considered throughout all phases of mission planning.

Optimum ZFW CG. All variants of the C-130 aircraft will be load planned to 20% - 22% Mean Aerodynamic Chord (MAC) unless specific loading instructions dictate otherwise.

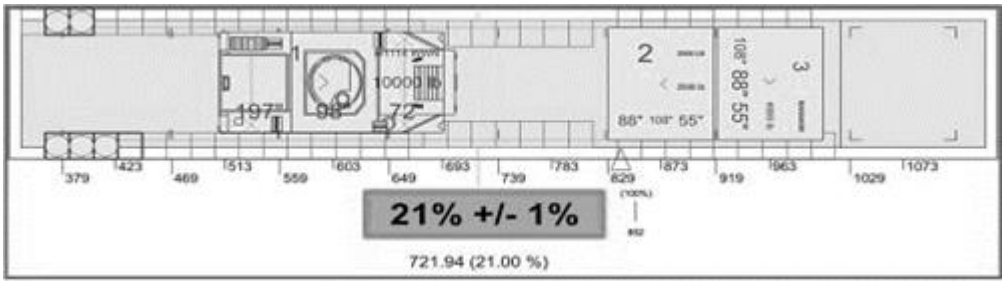

C-130 CHARACTERISTICS HOMEWORK

1. You have a HMMV that's 88 inches wide. Passengers can sit on _____ side(s) of it.

2. C-130H: The ramp is limited to _____ lbs. of cargo and can be _____ inches high.

3. When building up the cargo, which pallet position(s) on the C-130J needs a 6-inch inset when building up the cargo? _____

4. ICODES will flag passengers next to vehicle restrictions. True or False? _____

5. Which pallet position is limited to 8,500 lbs.? _____ C-130H. _____C-130J.

6. Why does pallet position 1 & 2 need to have an inset on the C-130J? _____

7. What is the planning ACL for the C-130H model? _____

8. How many passengers can fit on the C-130J model? _____

9. Where can passengers sit if a vehicle is 99 inches wide? _____

10. How far away does a passenger have to be next to palletized cargo? _____

11. C-130J: The ramp is limited to _____ lbs. of cargo and can be _____ inches high.

12. The optimum CG for all variants C-130 aircraft is _____.

13. How many passengers can be on the aircraft over long water flights? _____

C-130E/H CHARACTERISTICS

Maximum Takeoff Weight: 155,000 lbs.
Basic Operating Weight: 84,000 lbs.
Planning ACL: 25,000 lbs.
Optimum Zero Fuel CG: 20-22%

Passenger Considerations

Max Over Land - 90
Max Over Water 80

28 Sidewall Seats
14 Wheel Well Seats
48 Centerline Seats

NOTE: *Sidewall seats 1L and 15R are not visible in ICODES (reserved for aircrew)*

Outside Wheel Wells:
Up to 76" = Both Sides
77" to 96" = One Side Only
Greater than 97" = No Pax

Inside Wheel Wells:
Up to 52" = Both Sides
53" to 72" = One Side Only
Greater than 73" = No Pax

Most seats deploy as a set of two(2). Seat sets are bolded when passengers occupy one of the seats.

NOTE: *Ensure* **NO** *cargo overlaps deployed seats.*

Pallet Position #1
Max Wt: 10,355 lbs
Max Ht 96"
Note: 12" inset on one or both 88" sides about 76" height

Pallet Position #2
Max Wt: 10,355 lbs
Max Ht 96"

Pallet Position #3
Max Wt: 10,355 lbs
Max Ht 96"
Note: 6" inset one 88" side for safety aisle

Pallet Position #4
Max Wt: 10,355 lbs
Max Ht 96"
Note: 6" inset one 88" side for safety aisle

Pallet Position #5
Max Wt: 8,500 lbs
Max Ht 96"

Pallet Position #6
Max Wt: 4,664 lbs
Max Ht 76"
Note: 20" inset on left side for safety aisle

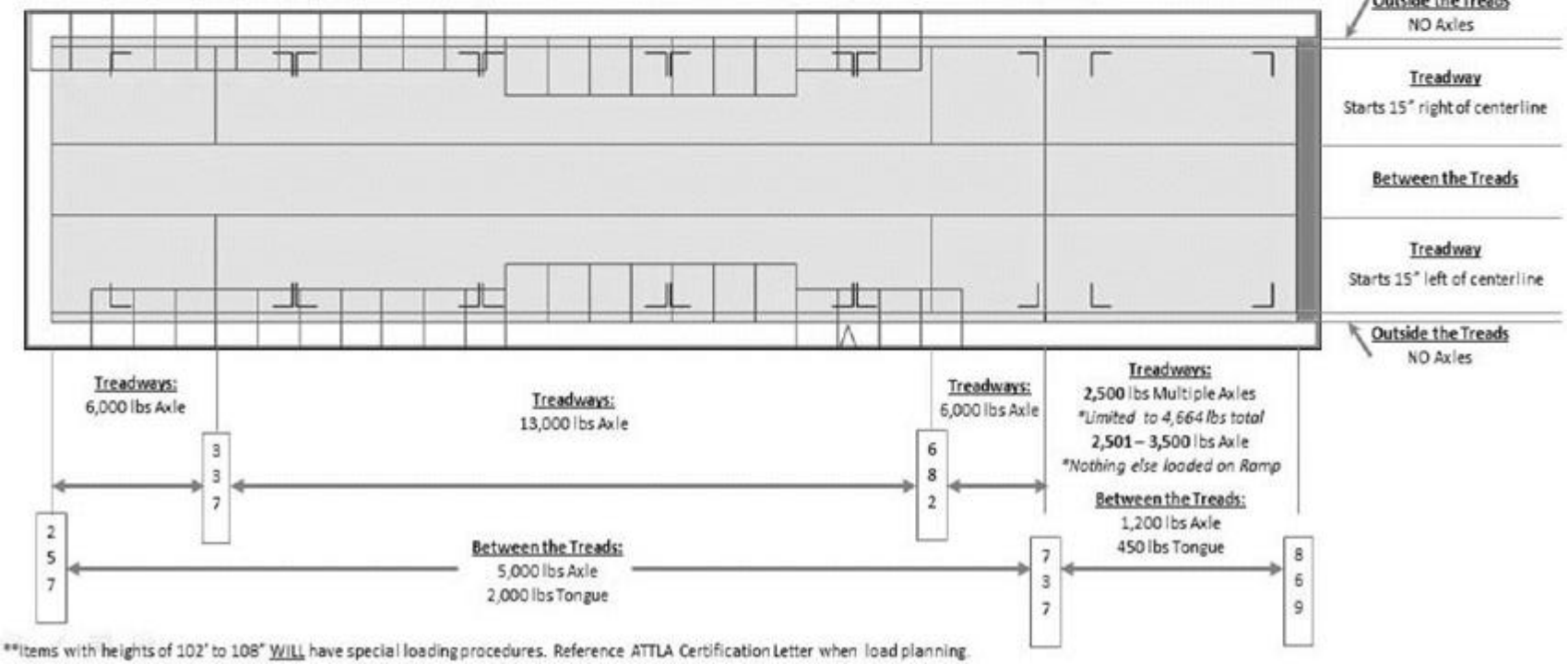

**Items with heights of 102" to 108" WILL have special loading procedures. Reference ATTLA Certification Letter when load planning.

C-130J-30 CHARACTERISTICS

Maximum Takeoff Weight: 164,000 lbs.
Basic Operating Weight: 89,000 lbs.
Planning ACL: 40,000 lbs.
Optimum Zero Fuel CG: 20-22%

Passenger Considerations

Max Over Land - 126
Max Over Water 80

46 Sidewall Seats
14 Wheel Well Seats
66 Centerline Seats

NOTE: *Sidewall seats 1L and 15R are not visible in ICODES (reserved for aircrew)*

Outside Wheel Wells:
Up to 76" = Both Sides
77" to 96" = One Side Only
Greater than 97" = No Pax

Inside Wheel Wells:
Up to 52" = Both Sides
53" to 72" = One Side Only
Greater than 73" = No Pax

Most seats deploy as a set of two(2). Seat sets are bolded when passengers occupy one of the seats.

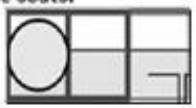

NOTE: *Ensure* **NO** *cargo overlaps deployed seats.*

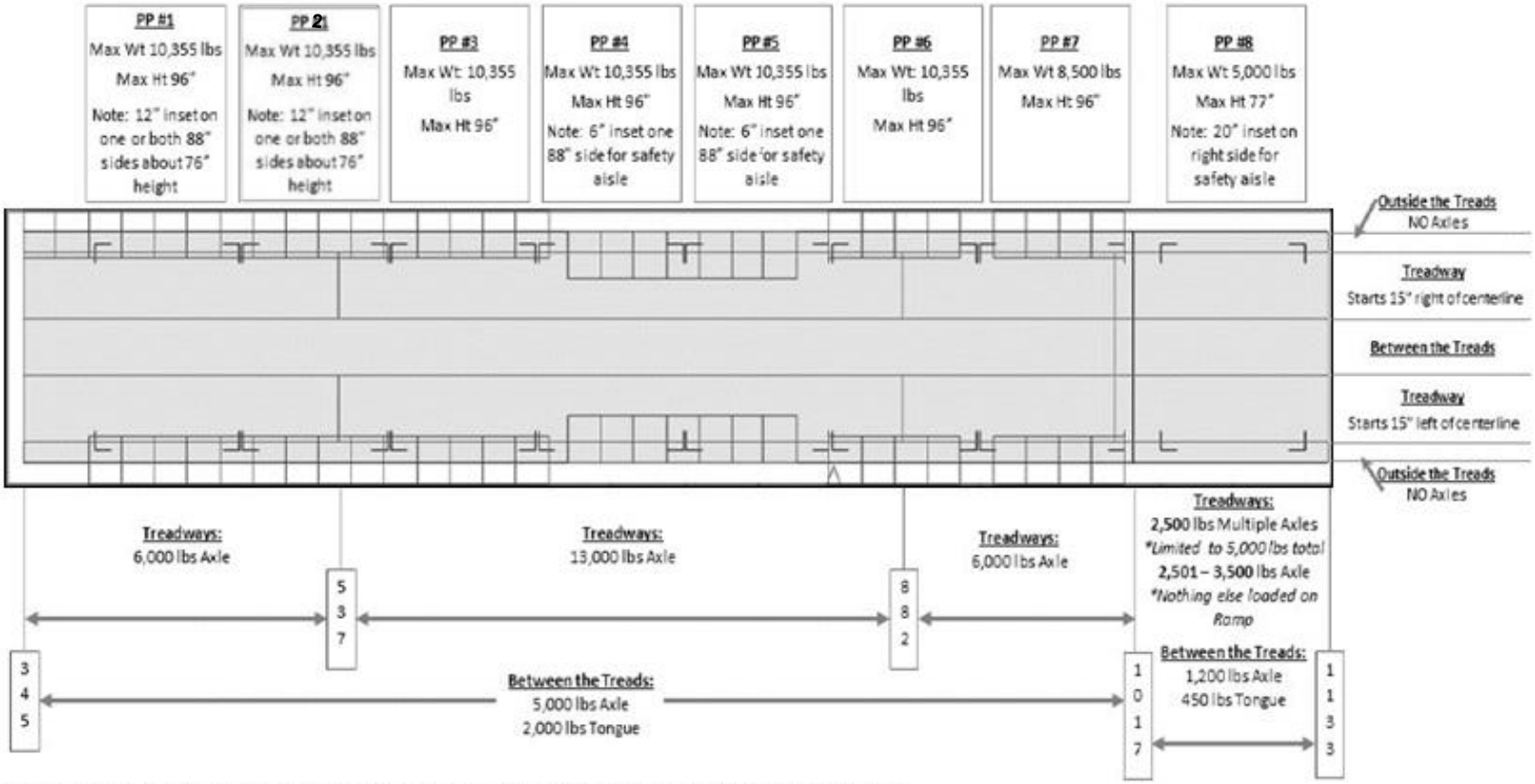

**Items with heights of 102" to 108" have special loading procedures. Reference ATTLA Certification Letter when load planning.

C-17 Characteristics

The objective of this lesson is for each student to apply C-17 load planning characteristics.

Test Objectives:

Describe the mission and the capabilities of the C-17 aircraft.

Give examples of weight, pallet, and passenger considerations when preparing to load plan a C-17 aircraft.

Demonstrate load planning procedures for side-by-side vehicle loading.

Distinguish between the different configurations for the C-17 aircraft.

Demonstrate C-17 load planning computations using ICODES

References:

DOD 4500.9-R Part III, “Mobility” -- Defense Transportation Regulation (DTR)

1C-17A-9, Cargo Loading Manual

AFI 24-103 AMC Cargo Load Planning Template System

AFI 11-2C-17 Volume 3 Addenda A

AMCI 24-101 Volume 11

Web Pages:

http://www.transcom.mil/dtr/part-iii/

The C-17 Globemaster III. The Boeing Corporation builds the C-17 Globemaster III. It has a dual mission of intra-theater (tactical) and inter-theater (strategic) airlift of outsized cargo items to small, austere airfields at or near the battle area by aerial delivery or air-land methods. The C-17 can be reconfigured in-flight from rolling stock configuration to logistic palletized configuration, equipment/paratroop air-drop configuration, passenger/troop carrying configuration, or litter/ambulatory aero-medical configuration. Aircraft equipment will accommodate any combination of the above configurations.

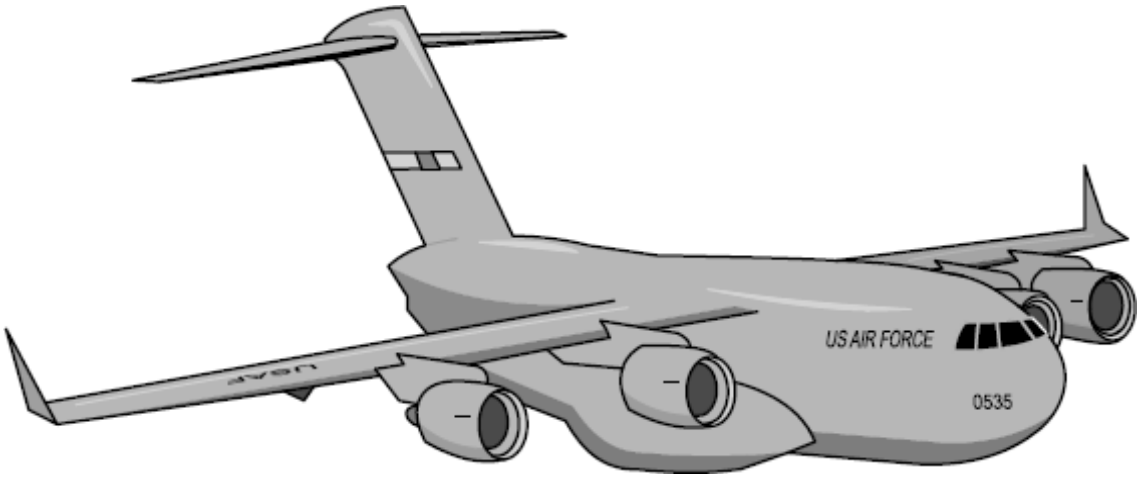

C-17 Aircraft

Dimensional Planning Factors. The size of the C-17 cargo compartment allows it to carry cargo that will not fit on other airlift aircraft. The cargo compartment is 818 inches long and 213 inches wide, and cargo may be loaded up to 142 inches high. The usable dimensions of the cargo ramp are 238 inches long, 216 inches wide, and 128 inches tall (when closed). These dimensions allow the loading of outsized cargo items to measure 142 inches high or 208 inches wide. If your cargo exceeds these dimensions; you must coordinate with your affiliated AMCU.

CARGO COMPARTMENT DIMENSIONS

HEIGHT VARIABLE

- **FS 347-827: 148”**
- **FS 828-937: 158”**
- **FS 938-1165: 162”**

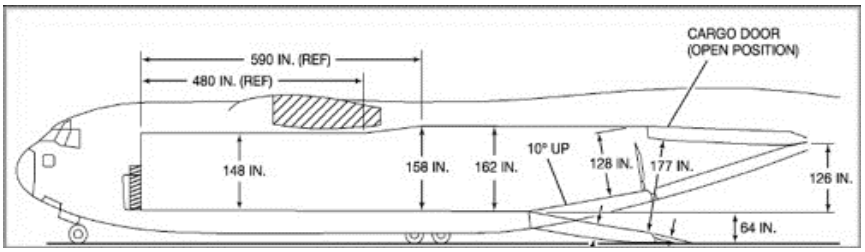

Weight Considerations. The C-17 has specific weight limitations to which you must adhere. The ACL of the C-17 is variable, but you may plan for loads up to 130,000 pounds for most operations.

Compartment Limitations. Ensure the following compartment weight limitations are not exceeded.

Compartment	Stations	Maximum weight
D	347-578	72,000 lbs.
E	578-1074	170,900 lbs.
F	1074-1165	35,000 lbs.
G	1165-1403	40,000 lbs.

Compartment Axle Limitation. Fuselage stations 347 through 578 and 1074 through 1403 (compartments D, F, and G) are restricted to maximum single axle weights of 27,000 pounds. Fuselage stations 578 through 1074 (compartment E) are limited to maximum single axle weights of 36,000 pounds.

Vehicles/Non-powered AGE Considerations.

SIDE-BY-SIDE LOADING RESTRICTIONS. When loading vehicles side-by-side, the effects of each axle or group of axles must be checked to ensure loading restrictions are not exceeded. Side-by-side limits apply to an 8-foot zone that extends 4 feet forward and 4 feet aft of the center of the heaviest single axle in the area. All axles will be checked to ensure they are within the allowable limits. If two or more single axles on one side fall within the same 8-foot zone, the axles will be treated as one axle, and the total weight shall not exceed axle chart limits.

NOTE: Axles exceeding 22,000 up to 27,000 pounds in compartments D (347-578). F, (1074-1165) or G (1165-1403) must be centerline loaded (+ or -) 8 inches of aircraft centerline. Axles 22,000 or less can be side by side loaded by using the 27,000-pound chart (See Chart #1).

EXAMPLE: If two or more axles are in an 8-foot zone, take the heaviest axle, and enter the 27,000-pound chart to determine the maximum allowable axle(s) weight that can be placed in this 8-foot zone.

NOTE: Axles exceeding 27,000 up to 36,000 pounds in compartments E (578-1074) must be centerline loaded (+ or -) 8 inches of aircraft centerline. Axles 27,000 or less can be side by side loaded by using the 36,000-pound chart (See Chart #2).

C-17 Chart #1
27,000 Pound Axle Zone
FS 347 - 578, and FS 1074 - 1403
(Compartments D, F, and G)

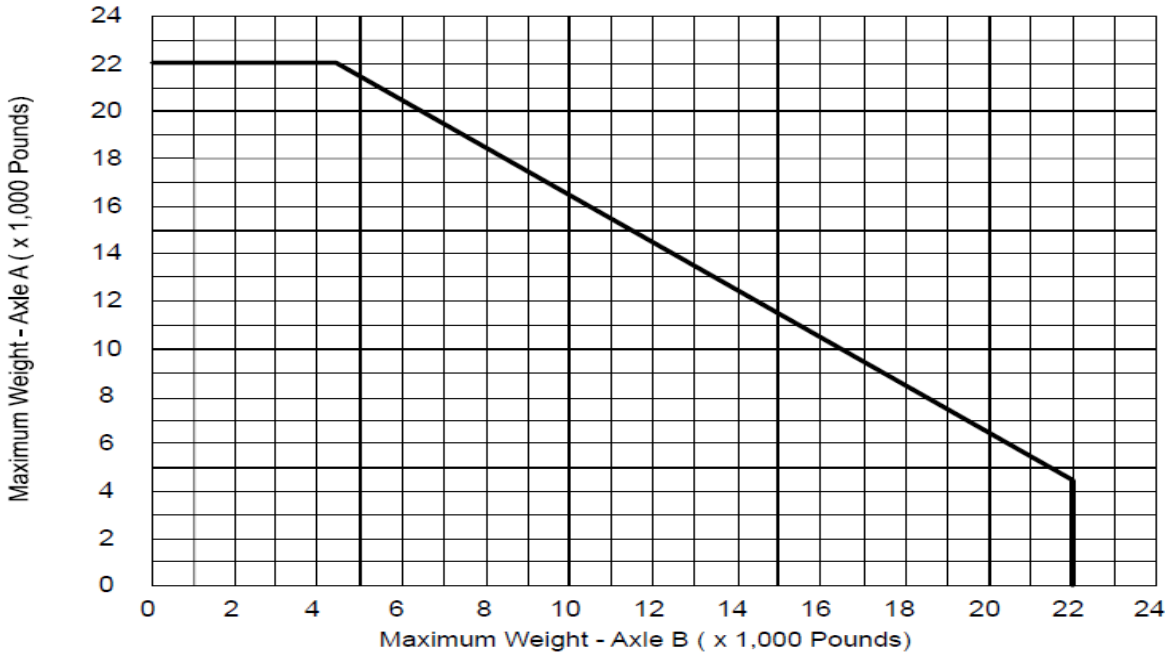

NOTE: *These side-by-side axle combinations apply only to compartment D, F and G (fuselage stations 347 - 578 and 1074 - 1403)*

C-17 Chart #2
36,000 Pound Axle Zone
FS 578 - 1074
(Compartment E)

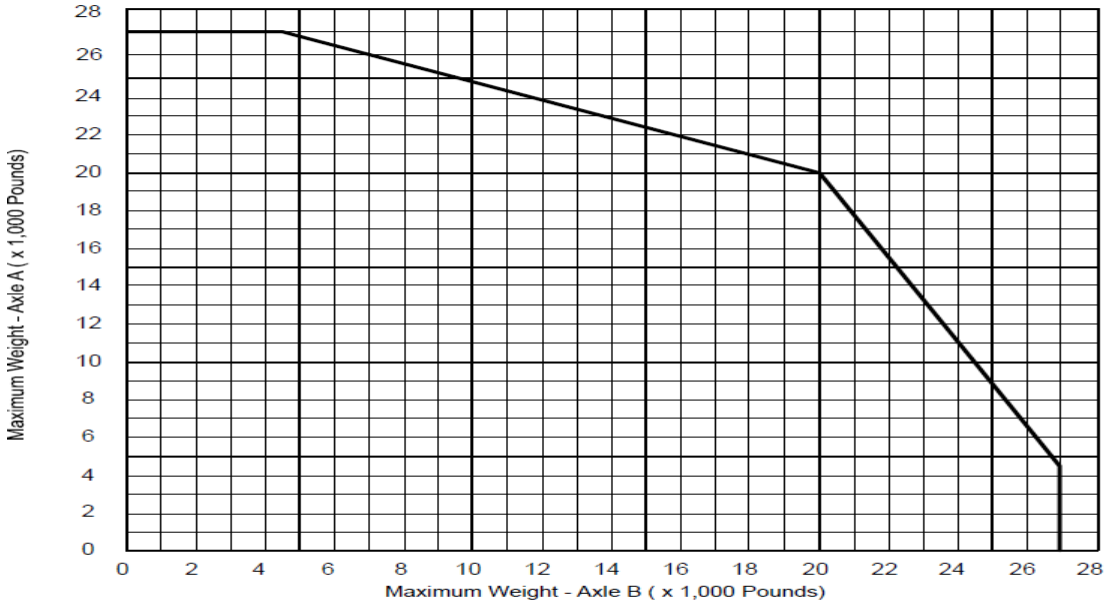

Figure 5.5.

NOTE: *These side by side axle combinations apply only to compartment E (578 to 1074). CALCULATION PROCEDURES: Enter on the left side of graph at weight of heaviest axle (axle A). Move laterally to the diagonal line. Move down to determine allowable weight for opposing axle (axle B).*

CARGO COMPARTMENT DIMENSIONS

Axles **22,001 lbs.** up to **27,000 lbs.** in compartments “D”, “F”, and “G” **MUST** be centerline loaded (+ or -) 8” of aircraft centerline.

- Axles **22,000 lbs. or less** can be side by side loaded.

Axles **27,001 lbs.** up to **36,000 lbs.** in compartment “E” **MUST** be centerline loaded (+ or -) 8” of aircraft centerline.

- Axles **27,000 lbs. or less** can be side by side loaded.

COMPARTMENTS	SIDE BY SIDE AXLE CHART	AXLES LOADED +/-8 IN. C/L	MAX AXLE WT.
D/F/G	≤22,000 LBS = D/F/G CHART	22,001-27,000 LBS	27,000 LBS
E	≤27,000 LBS = E CHART	27,001-36,000 LBS	36,000 LBS

NOTE: All vehicles, tracked or on pneumatic tires, whose gross weight exceeds 65,000 pounds, will be loaded within 8 inches of the aircraft centerline.

TRACKED VEHICLES LOADED BESIDE SINGLE AXLES. Use the following table for tracked vehicles loaded beside single axles.

Stations 347 to 578 and 1074 to 1403:

Tracked vehicle weight	Maximum single axle weight
35,000 lbs. or less	16,000 lbs.
35,001 lbs. to 65,000 lbs.	11,000 lbs.

Stations 578 to 1074:

Tracked vehicle weight	Maximum single axle weight
35,000 lbs. or less	24,000 lbs.
35,001 lbs. to 65,000 lbs.	22,000 lbs.

Pallet Considerations. The C-17 can carry pallets in either the logistics restraint rail system (Logistic), aerial delivery rail system (ADS), or a combination. All pallet positions can accommodate 10,355 pounds each, with a maximum height of 96 inches for netted cargo. **NOTE:** The maximum weight allowed on the cargo ramp is 40,000 pounds.

A. Logistic: The logistics system can carry 18 pallet positions loaded on 88” width bias. 14 pallets may be loaded on the main floor and four pallets on the ramp for a total of 18 pallets.

B. ADS: The ADS system can carry 11 pallet positions loaded on a 108” width bias. Nine pallets may be loaded on the main floor and two pallets on the ramp for a total of 11 pallets.

C. Combination: The pallet restraint system on the aircraft floor allows for a mixture of both the logistics and aerial delivery systems. The combination of the systems allows for greater flexibility in the compromise between palletized cargo and troop/ passenger seating.

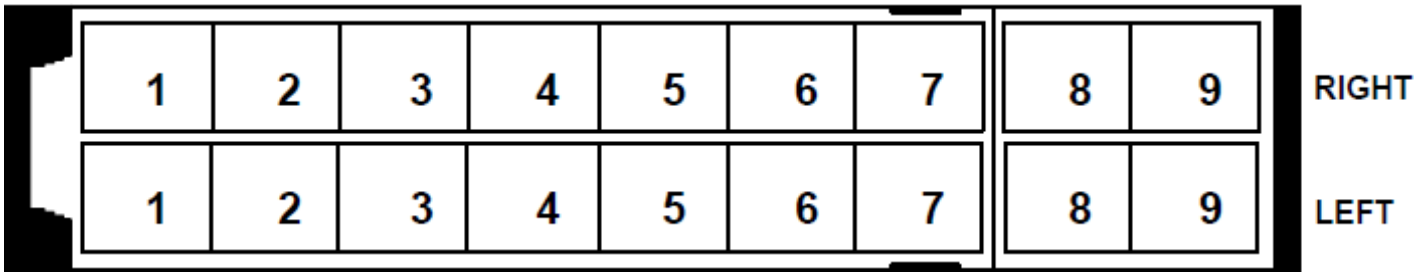

C-17 Logistics Rail System (LOG)

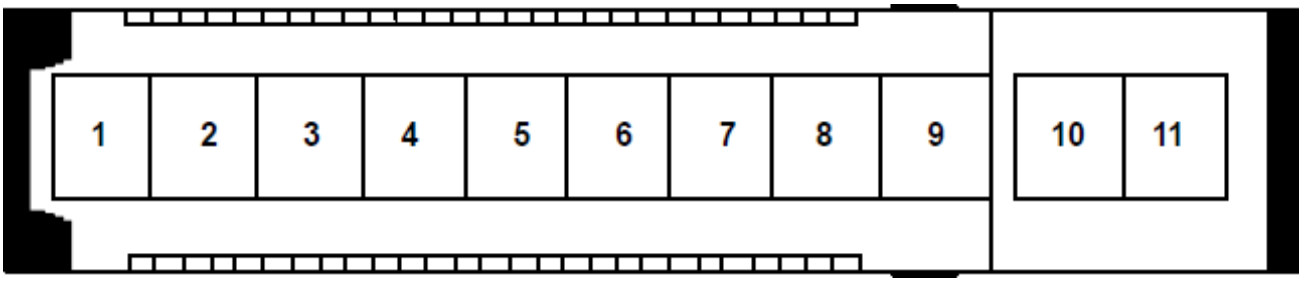

C-17 Aerial Delivery Rail System (ADS)

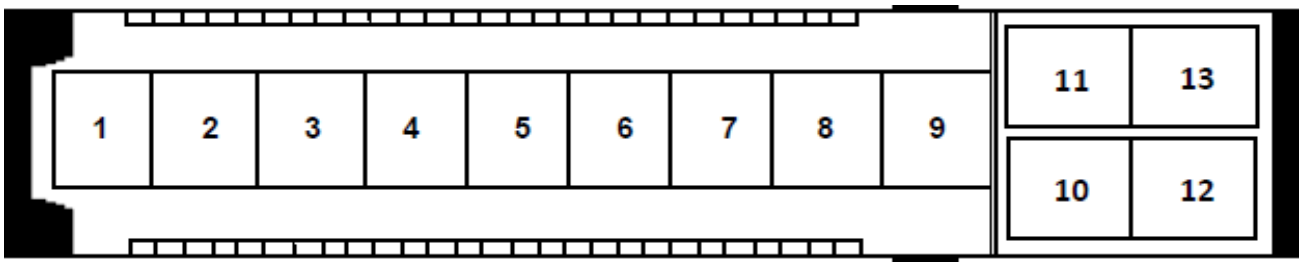

C-17 Combination of ADS and LOG

Passenger Considerations. The C-17 can carry a maximum of 101 troops using centerline and sidewall seats. Fifty-three troops or passengers can be carried when using permanently installed sidewall seating.

Additional Loadmaster (LM) / Crewmember Requirement. When carrying more than 40 passengers in any configuration, the maximum seating capacity must be reduced by one to accommodate the requirement for an additional C-17 qualified crewmember in the cargo compartment for takeoff and landing. Example: 54 sidewall seats minus 1 for additional LM = 53 available passenger seats.

Palletized Seat Kit. Palletized seat kits are typically used for intra-theater passenger movement and are not readily available for inter-theater contingency movement. When installed, a maximum of 143 seats are available for flights over land. Based on life raft availability, flights over water are limited to 138 personnel (including crew). Over water flights with more than 138 personnel (including crew) require MAJCOM/A3 waiver.

Passengers Beside Netted or Strapped Cargo. When the load consists of palletized netted cargo or cargo secured with straps, a 30-inch space will be maintained between the cargo and the nearest forward-occupied seat. Regardless of pallet construction, passengers will not be seated alongside pallets loaded in the Logistics rail system.

Passengers Beside Bulk/Wheeled Cargo. If bulk cargo and/or vehicles are loaded on the main cargo floor, sidewall seats adjacent to cargo extending past +/- 85 inches of aircraft center will not be used.

If bulk cargo and/or vehicles are loaded on the main cargo floor, sidewall seats adjacent to cargo extending **+/- 85”** of aircraft centerline will not be used.

Passengers cannot be loaded next to logistics pallet positions.

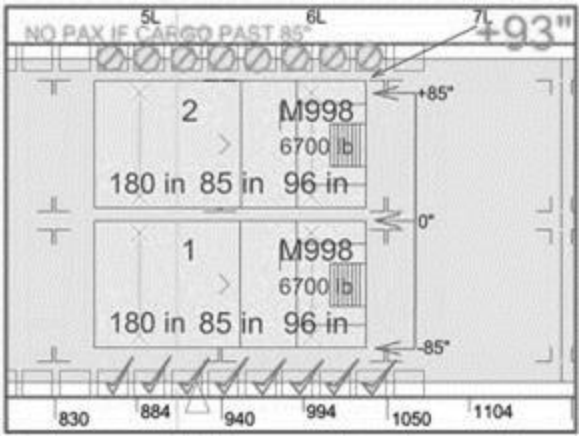

Passenger Baggage. When 20 or more passengers/troops are planned, a pallet position shall be left open to accommodate palletized/floor-loaded baggage.

Configurations. Standard cargo compartment configurations ensure that aircraft arrive at the airfield prepared to load the equipment and personnel immediately. The load planner must select the proper configuration code to avoid loading delays. Refer to AFI 11-2C-17 Vol 3 Addenda A for detailed configuration information and modifications.

NOTE: Load planners will typically utilize the Standard Air Land (STD AL) configuration when creating load plans with ICODES software.

Load Planning Factors. Air Mobility Command (AMC) instituted a fuel efficiency initiative to optimize fuel usage. Mission planners will manage aviation fuel as a limited commodity and precious resource. Fuel optimization will be considered throughout all phases of mission planning.

Optimum ZFW CG. C-17 aircraft will be load planned unless specific loading instructions dictate otherwise. Aircraft + cargo weights:

- Less than 400,000 lbs. = 40% MAC
- 400,001 - 425,000 lbs. = 39% MAC
- 425,001 - 447,000 lbs. = 38% MAC

C-17 CHARACTERISTICS HOMEWORK

1. In cargo compartment F, if one axle is 9,000 lbs., how much can the axle side-by-side to it be? _____ Lbs.

2. Passengers will not sit next to vehicles if the vehicles extend past _____ of the centerline.

3. What is the optimum CG of the C-17 aircraft? _____

4. How many passengers dictate whether or not a baggage pallet shall be used? _____

5. Which pallet configuration enables a maximum of 18 pallets to be loaded? _____

6. What is the maximum amount of weight that can go on the ramp? _____ Lbs.

7. The C-17 has a _____ mission of _____-theater and _____-theater.

8. ICODES will flag passengers next to vehicle restrictions. True or False.

9. If a vehicle is over 65,000 lbs, How must it be loaded? _____

10. The 8-foot rule extends 4 feet forward and 4 feet aft of the _____axle.

11. Which compartments can a vehicle with a heaviest axle of 21,000 lbs. be loaded in? _____

12. If a vehicle has an axle weight of 28,500 lbs., which compartments can it be loaded in and how should it be loaded? _____

13. The standard ACL for load planning of the C-17 is _____lbs.

C-17 CHARACTERISTICS

Maximum Takeoff Weight: 585,000 lbs.
Basic Operating Weight: 284,945 lbs.
Planning ACL: 130,000 lbs
Optimum Zero Fuel CG: 40% = ZFW less than 400K
39% = ZFW between 400K - 425K
38% = ZFW between 425K - 447K

Passenger Considerations

53 Sidewall Seats
48 Centerline Seats

NOTE: *Sidewall seats adjacent to cargo extending past **+/- 85"** of aircraft centerline will **NOT** be used*

Tracked Vehicles Beside Single Axle Restrictions

Compartments D, F and G:

Tracked Vehicle Wt	Max Single Axle Wt
35,000 lbs or less	16,000 lbs
35,001 - 65,000 lbs	11,000 lbs

Compartment E:

Tracked Vehicle Wt	Max Single Axle Wt
35,000 lbs or less	24,000 lbs
35,001 - 65,000 lbs	22,000 lbs

Logistic Rail System (LRS) *Pallet Positions 1R/L-9R/L Loaded on 88" width bias*
Max Weight: 10,355 lbs
Max Height: 96"

Aerial Delivery System (ADS) *Pallet Positions 1-11 Loaded on 108" width bias*
Max Weight: 10,355 lbs
Max Height: 96"

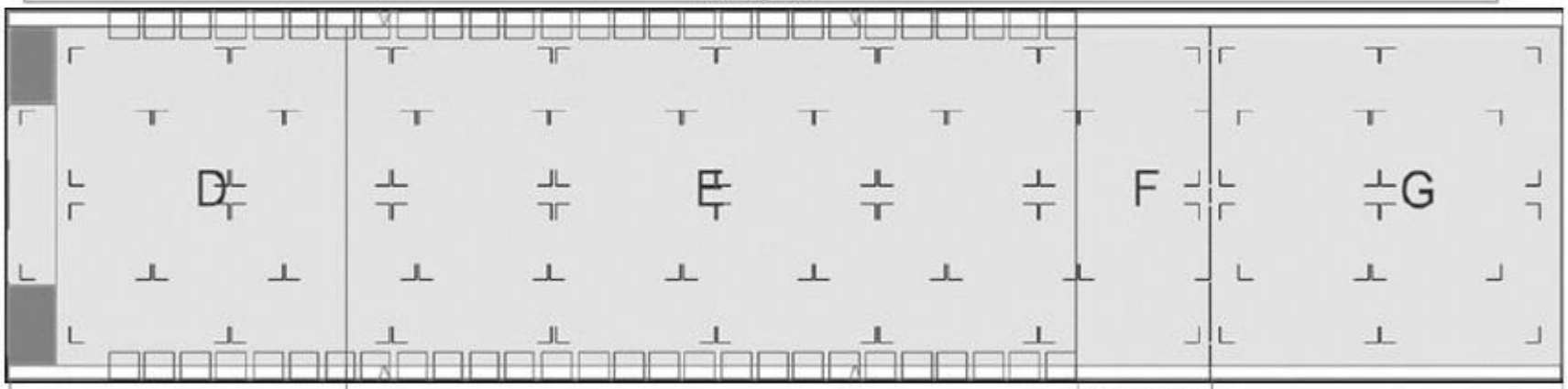

Compartment D Floor Limits
Maximum Weight: 72,000 lbs
Maximum Axle:
27,000 lbs (+/- 8 inches of centerline)
22,000 lbs (Side-by-Side)

Compartment E Floor Limits
Maximum Weight: 170,900 lbs
Maximum Axle:
36,000 lbs (+/- 8 inches of centerline)
27,000 lbs (Side-by-Side)

Compartment F
Maximum Wt:
35,000 lbs
Maximum Axle:
27,000 lbs
(+/- 8" center)
22,000 lbs
(Side-by-Side)

Compartment G Floor Limits
Maximum Weight: 40,000 lbs
Maximum Axle:
27,000 lbs (+/- 8 inches of centerline)
22,000 lbs (Side-by-Side)

347 — 578 — 1074 — 1165 — 1403

**Items with heights of 102' to 108' WILL have special loading procedures. Reference ATTLA Certification Letter when load planning.

C-17 CHARACTERISTICS

C-5 Characteristics

The objective of this lesson is for each student to apply C-5 load planning characteristics.

Test Objectives:

Summarize the roles and missions of the C-5 aircraft

Give examples of weight, pallet, and passenger considerations when preparing to load plan a C-5 aircraft.

Explain what must be considered when loading items side-by-side on a C-5 aircraft

Describe the different configurations of the C-5 aircraft

Demonstrate C-5 load planning computations using ICODES

References:

DOD 4500.9-R Part III, “Mobility” -- Defense Transportation Regulation (DTR)

1C-5A-9, Loading Instructions

AMCI 24-101 Volume 11 Cargo and Mail Policy

AFI 11-2C-5 Volume 3 Addenda A Configurations/Mission Planning

Web Pages:

http://www.transcom.mil/dtr/part-iii/

The C-5 Galaxy. The C-5 Galaxy aircraft was designed for the primary mission of inter- theater (strategic) airlift of outsized cargo. A typical example of effective C-5 use is to move outsized cargo such as large helicopters, tanks, and communication vans.

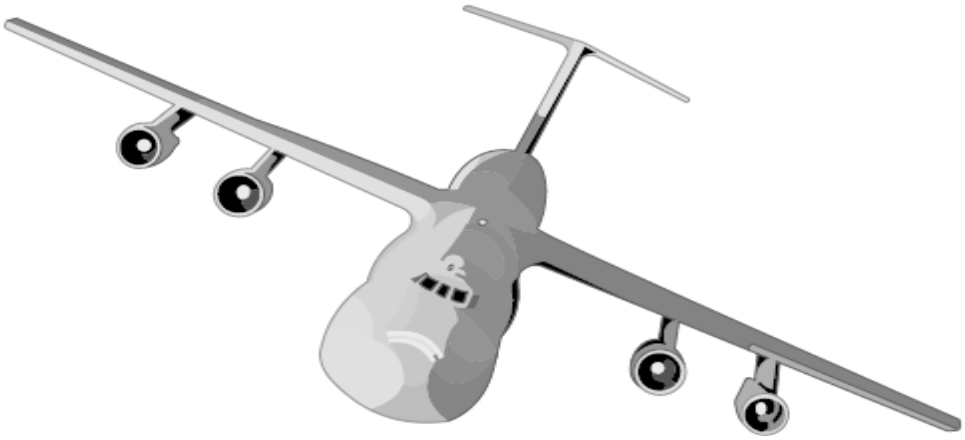

C-5 Galaxy Aircraft

Dimensional Planning Factors. The C-5 is the largest US airlift aircraft. Its size allows it to carry cargo that will not fit into any other airlift aircraft. The cargo compartment is 1736 inches long, 228 inches wide, and 162 inches high. The C-5 employs the use of two cargo loading ramps. The forward ramp is 122 inches long and 228 inches wide, and the aft ramp is 155 inches long and 228 inches wide.

C-5 Weight/Loading Considerations. As with all aircraft, weight limitations are critical to flight. The standard planning ACL for the C-5M is 150,000 lbs. Specific weight restrictions apply to the cargo compartment floor. Restrict cargo between fuselage stations 395 to 517 and FS 1971 to FS 2131 (aircraft ramps) to 3,600 lbs. maximum weight in any 20-inch length. Fuselage stations 517 to 724 and FS 1884 to FS 1971 are restricted to 20,000 lbs. in any 40" length. Fuselage stations 724 to 1458 and FS 1518 to FS 1884 are restricted to maximum weights of 36,000 lbs. in any 40-inch length. Limit fuselage stations 1458 to 1518 to no greater than 25,000 lbs. combined maximum weight of concentrated cargo and vehicles with axles.

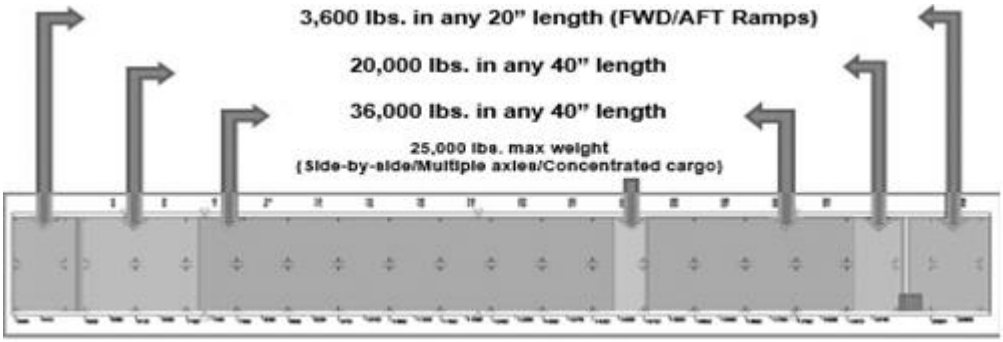

NOTE: Side-by-side, multiple wheeled vehicle axles and concentrated cargo loaded between FS 1458 and FS 1518 are limited to a combined maximum weight of 25,000 pounds. Tracked vehicles are excluded from this restriction.

Vehicles/Non-powered AGE Considerations.

C-5 Side-by-Side Loading. The large size of the C-5 will allow the side-by-side loading of many cargo items. Due to the many factors impacting cargo loading, ATTLA certification letters may not specifically address the ability of each item to be loaded beside another. Because the C-5 cargo compartment is arched rather than square, items greater than 114 inches in height and 96 inches in width may need special consideration to determine if the cargo items will fit side- by-side.

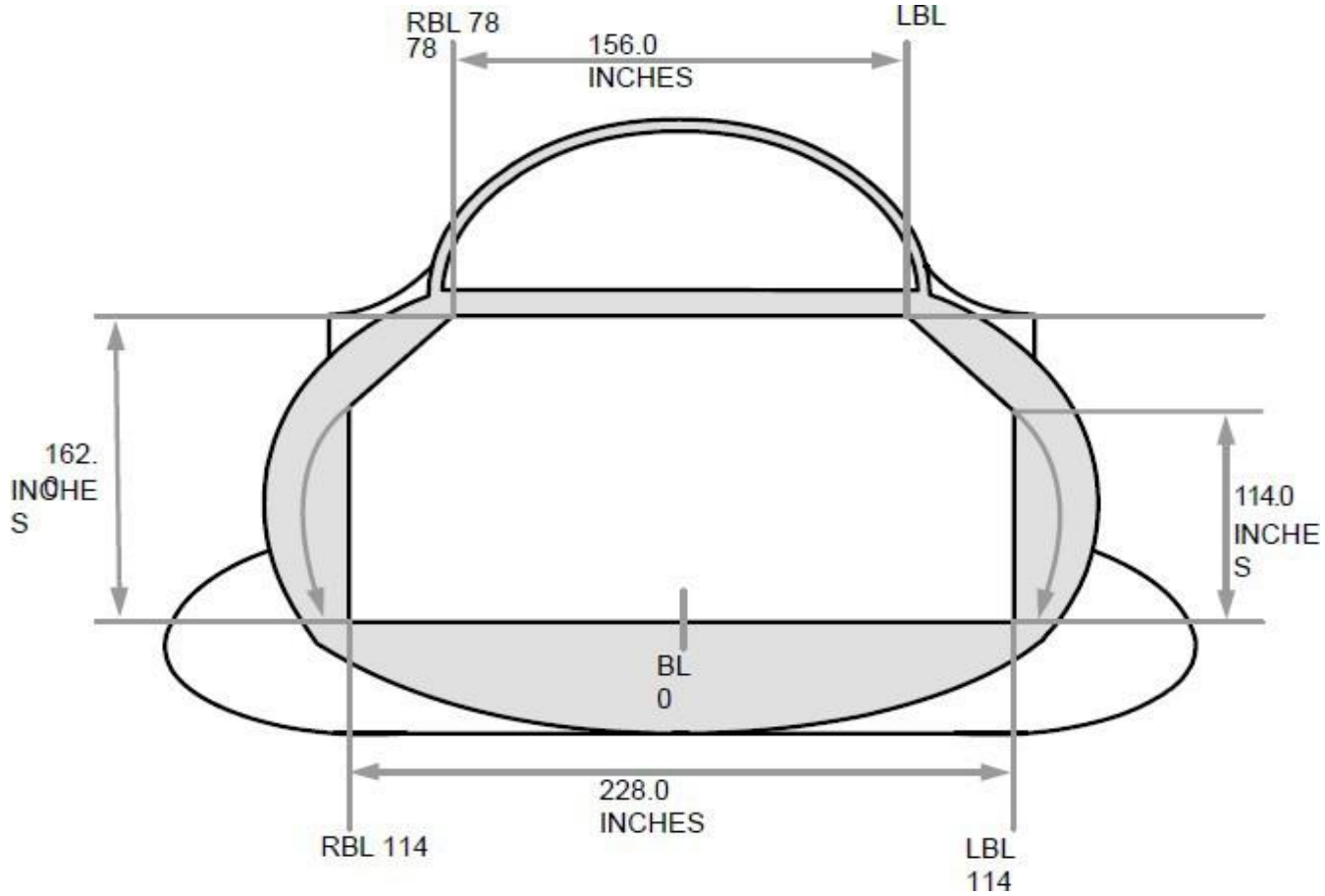

C-5 Cargo Compartment Profile

Pallet Considerations. The C-5 can carry a maximum of 36, 463L pallets. Pallet positions number 1, 2, 35, and 36 (aircraft ramps) may carry pallets up to 7,500 pounds each. Pallet positions 3 through 34 can carry pallets up to 10,355 pounds each. Three pallet profiles are used on the C-5.

Pallet positions 1 and 2. Palletized cargo placement is restricted to 90 inches wide, 84 inches long, and 96 inches high. This leaves a 14-inch aisleway on the outboard edge of each pallet. The aisleway is to allow the loadmaster access to the ramp locking pins.

Pallet positions 3 through 34 can carry pallets up to 104 inches wide, 84 inches long, and 96 inches high.

Pallet positions 35 and 36. Palletized cargo placement is restricted to 90 inches wide, 84 inches long, and 70 inches high. This provides a 14-inch aisleway on the outboard edge of each pallet. The aisleway is to allow the loadmaster access to the ramp locking pins.

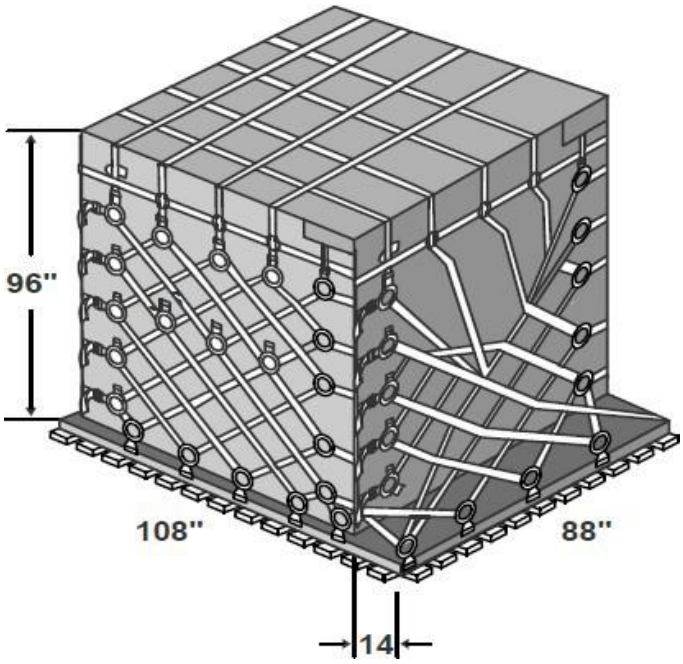

C-5 Pallet Position 1 & 2

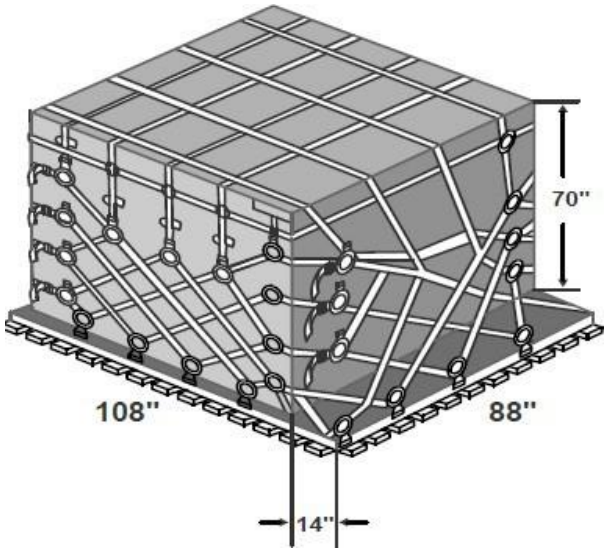

C-5 Pallet Position 35 & 36

PALLET POSITIONS

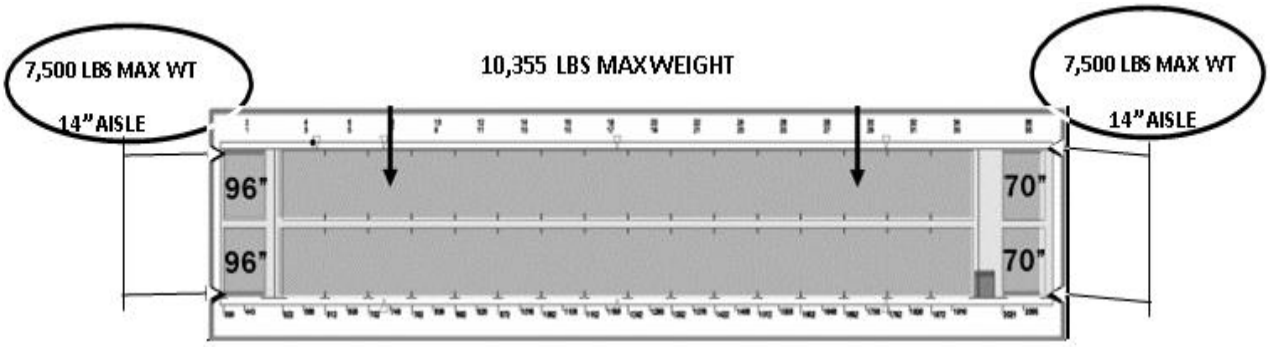

NOTE: ICODES will flag all cargo restrictions on the C-5 Galaxy.

Passenger Consideration. The C-5 has a separate passenger compartment above the cargo compartment, providing seats for 73 passengers without affecting cargo loading. The upper troop compartment planning fuselage station is always fuselage station 1675.

Load Planning Factors. Air Mobility Command (AMC) instituted a fuel efficiency initiative to optimize fuel usage. Mission planners will manage aviation fuel as a limited commodity and precious resource. Fuel optimization will be considered throughout all phases of mission planning.

Optimum ZFW CG. C-5 aircraft will be load planned to 38% +/- 1% Mean Aerodynamic Chord (MAC) unless specific loading instructions dictate otherwise. 36% will be used if passengers/bags are omitted (CB will shift aft when they are added).

C-5 CHARACTERISTICS HOMEWORK

1. The C-5 Galaxy can carry a maximum of _____ pallets.

2. How high can a pallet be loaded on the aft ramp of the C-5 Galaxy? _____ inches

3. Why does pallet positions 1, 2, 35, & 36 need an 14" aisle-way on the outboard edge of each pallet?
   _____

4. ICODES will flag all cargo restrictions on the C-5 Galaxy. True or False

5. How high can vehicles be if loaded side-by-side on the C-5 Galaxy? _____ inches

6. What is the C-5's primary mission? _____

7. How heavy can the ramp pallets be? _____ Lbs.

8. How many passengers can be loaded on the C-5 Galaxy? _____

9. What is the optimal CG of the C-5 Galaxy? _____

C-5 CHARACTERISTICS

Maximum Takeoff Weight:	840,000 lbs. (C-5A/B) 837,000 lbs. (C-5M)
Basic Operating Weight:	379,000 lbs. (C-5A/B) 384,000 lbs. (C-5M)
Planning ACL:	130,000 lbs. (C-5A/B) 150,000 lbs. (C-5M)
Optimum Zero Fuel CG:	38% 36% (when Pax/Bags not accounted for)

0 / 73

Passenger Considerations

Troop compartment is located above the aft end of the cargo compartment. A maximum of 73 rear facing seats are available for use.

Height Restrictions

Items over 114 Inches must be inset. Use "Height Constraint" in ICODES to maximize aircraft space.

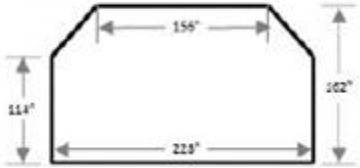

*Cross section of C-5 Cargo Compartment

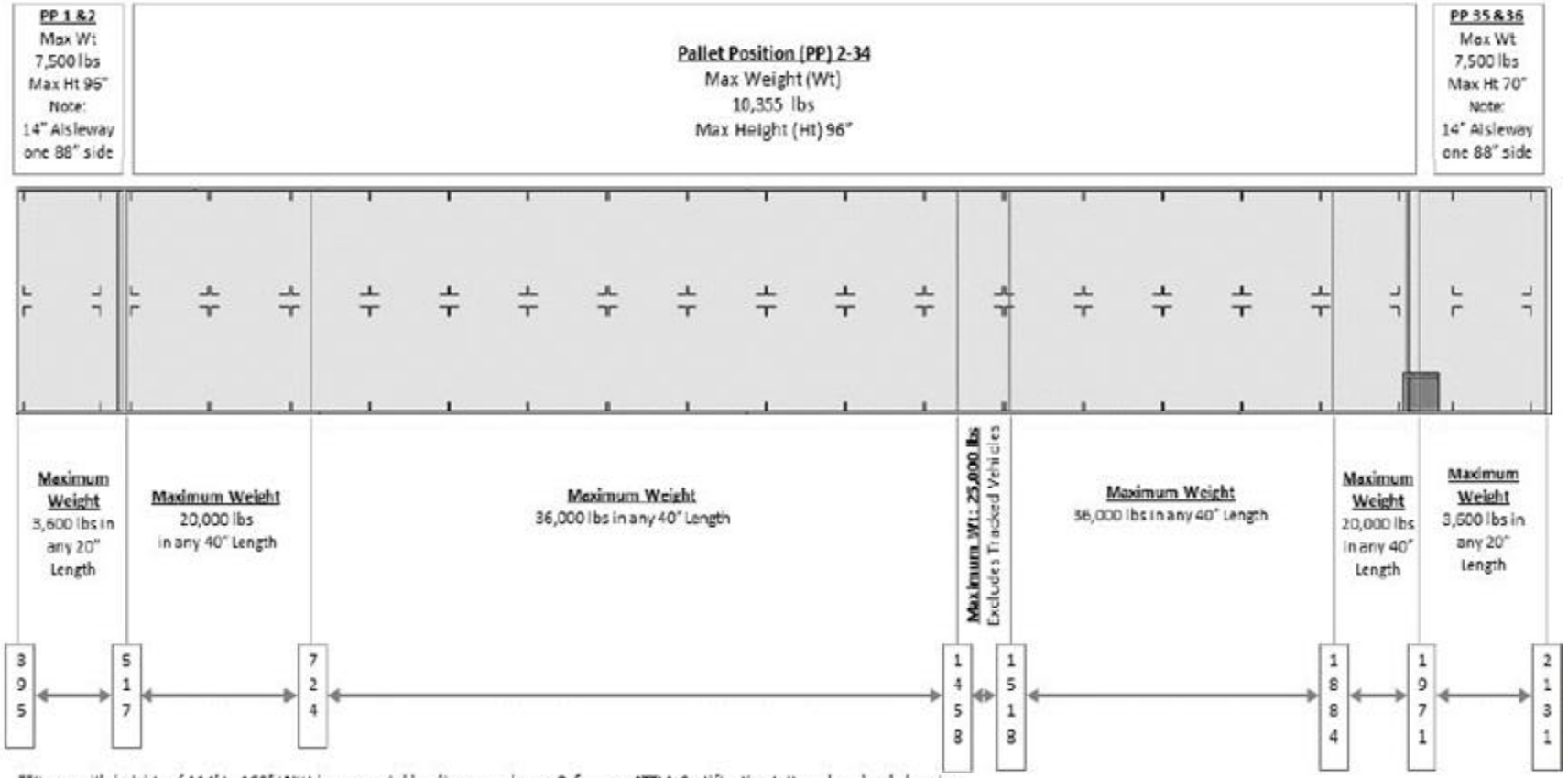

**Items with heights of 114" to 162" WILL have special loading procedures. Reference ATTLA Certification Letter when load planning.

C-5 CHARACTERISTICS

Appendix A

CENTER OF BALANCE (CB)

Determination. The CB of cargo must be determined to accurately compute the weight and balance condition of a loaded aircraft. The agency offering cargo for air shipment is responsible for marking each item with the correct gross weight and a CB point. Items measuring 10 feet or longer and/or any item having a balance point other than its center (ex. pallet train) must be weighed, marked, and measured for it's CB. Before weighing any vehicles, ensure your scales are calibrated. All vehicles will have axle weights marked above each axle, on both sides of the vehicle, with weather resistant material. Trailers and prime movers attached to vehicles for airlift must be weighed separately, marked, then attached. Vehicles with a load-carrying capability will be marked indicating an **empty** or **loaded** (truck bed with cargo/bags) CB. Items improperly marked **will not** be accepted for airlift.

Terminology. The following terms are used to calculate CB of a vehicle.

Reference Datum Line (RDL). Predetermined point from which all measurements are taken. Normally, the RDL is established at the forward front edge.

Front Overhang (FOH). Distance in inches from front bumper to center of front axle.

Wheel Base (WB). Distance in inches from center of front axle to center of rear axle or center of tandem axles.

Gross Weight (GW) (pounds).

Rear Overhang (ROH). Distance from rear or center of tandem axles to rear bumper.

Front Axle Weight (FAW) (pounds).

Intermediate Axle Weight (IAW) (pounds).

Rear Axle Weight (RAW) (pounds).

From Forward Edge (FFE).

Moment. The product obtained by multiplying the weight by the distance (in inches) from the RDL.

Appendix A

Calculating Center of Balance. When computing in search for your CB always remember to round to the nearest whole inch. If your value is .5 or above round up, if .4 and below round down. In order to save time, after you are done weighing an axle immediately mark the vehicles axle with it's weight. When you find your CB immediately mark it's position with a T marking. The horizontal part of your T marking contains the vehicles gross weight, and whether it's been weighed empty or loaded. The vertical portion will contain the letters CB and number in inches FFE indicating this position is exactly the point of balance and distance FFE.

CB formula. Use the following formula to compute the CB location of vehicles. Multiply weight by distance of each axle from the reference datum line (in inches), and then divide the total results by the vehicle gross weight. The resulting figure is the number of inches to be measured aft from the reference line to the CB of the vehicle.

W1- Front axle weight

W2- Rear axle weight

D1- Distance from RDL to front axle or center of articulated tandem axle

D2- Distance from RDL to rear axle or center of articulated tandem axle

Example of the basic formula for determining the CB.

$$\frac{(Dl \times W1) + (D2 \times W2)}{\text{GROSS WEIGHT}} = \text{CB from RDL}$$

The following examples show how you would apply this formula to determine a vehicles CB. Also, provided is the method used to find the center of balance for tracked vehicles such as tanks.

EXAMPLE 1 – Determine CB of Vehicles. Step 1.

Weigh all axles individually.
Step 2. Mark weight above each individual axle.
Step 3. Establish the RDL at the forward edge of the vehicle.
Step 4. Measure all distances from RDL to center of each individual axle. Step 5. Distance multiplied by weight equals a moment

EXAMPLE ONE

D I from RDL (from forward edge) to center of front axle = 20"

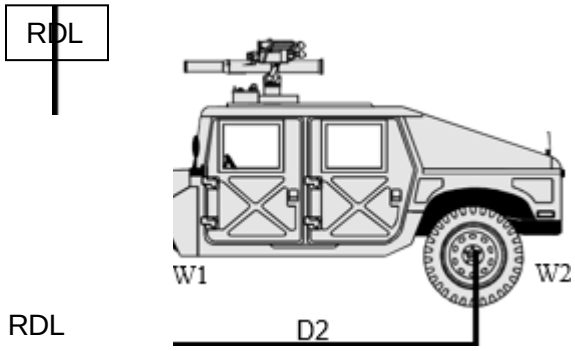

20” x 2.870 lbs = 57,400 moments
150” x 2,550 lbs = 382,500 moments

57,400 + 382,500 = 439,900 Total Moments

439,900 Total Moments / 5,420 GVW = 81.16” = 81” from RDL

EXAMPLE TWO

D1 from RDL to forward support weight= 15"
W1 of forward support= 250lbs
D2 from RDL to center of axle= 102"
W2 of axle= 2,250lbs

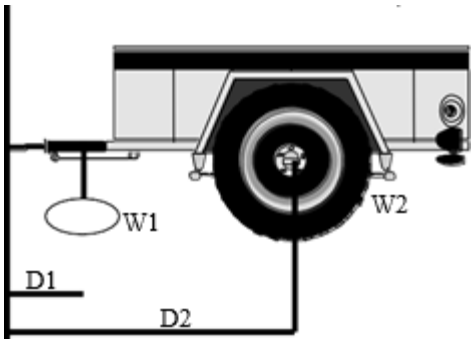

EXAMPLE THREE

D1 from RDL to center front axle= 70"
W1 of front axle= 12,500lbs
D2 from RDL to center of middle axle= 222"
W2 of Middle axle= 12,900lbs
D3 from RDL to center of rear axle= 276"
W3 of rear axle= 12,700lbs

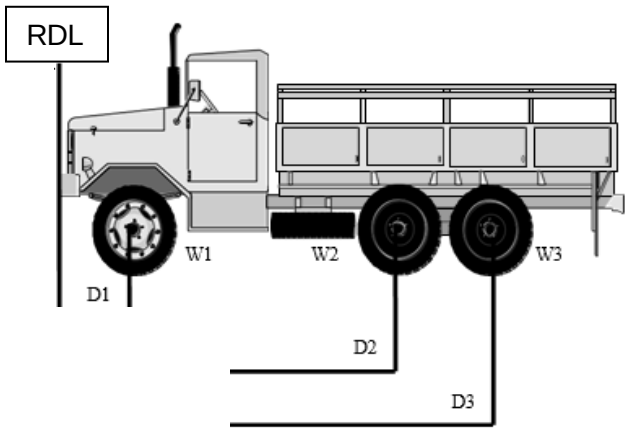

70” x 12,500 lbs = 875,000 moments
222” x 12,900 lbs = 2,863,800 moments
276” x 12,700 lbs = 3,505,200 moments

875,000 + 2,863,800 + 3,505,200 = 7,244,000 Total Moments

7,244,000 Total Moments / 38,100 GVW = 190.13” = 190” from RDL

EXAMPLE FOUR

Determine CB of Tracked Vehicles.

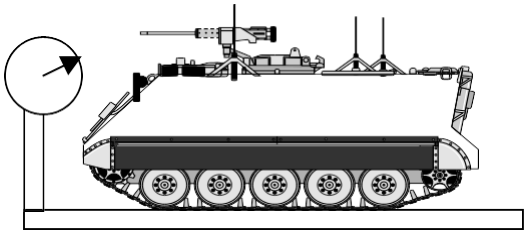

Step 1. To determine weight, drive the vehicle onto a platform scale (truck scale or coal yard scale) large enough to accommodate the entire vehicle. Record the weight.

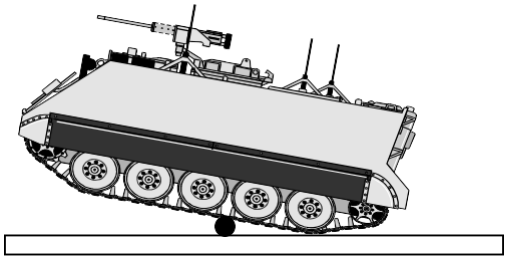

Step 2. To determine CB, drive the vehicle onto a wooden beam or pole until it tilts forward. Mark the side of the vehicle at the point of tilt
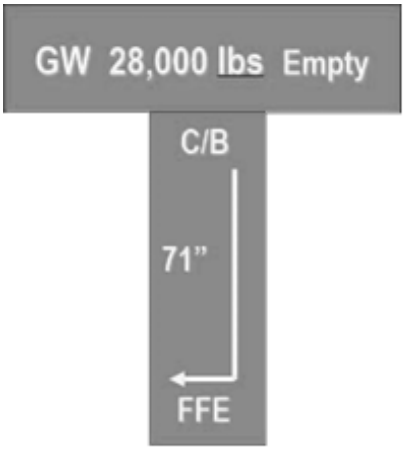
Step 3. Mark the CB and gross weight of the vehicle.